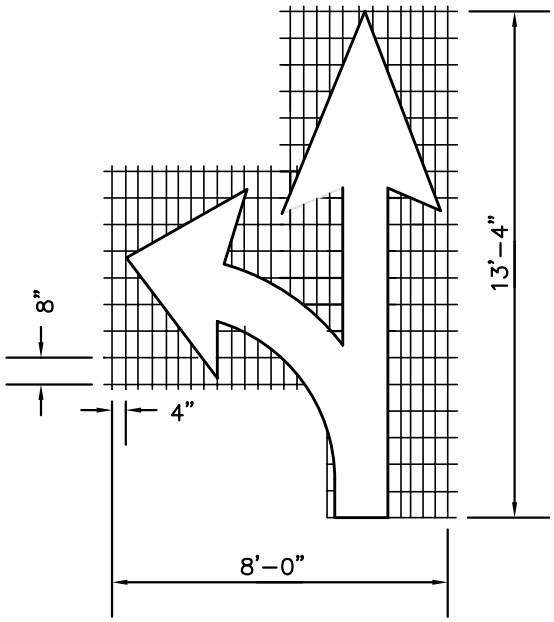

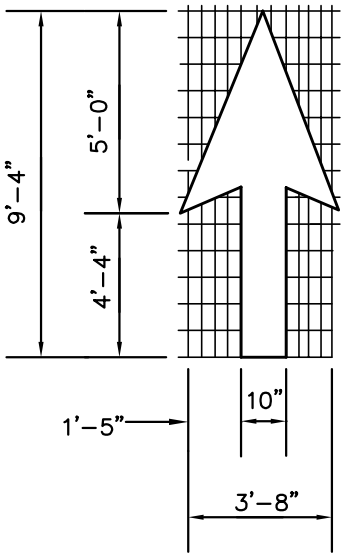

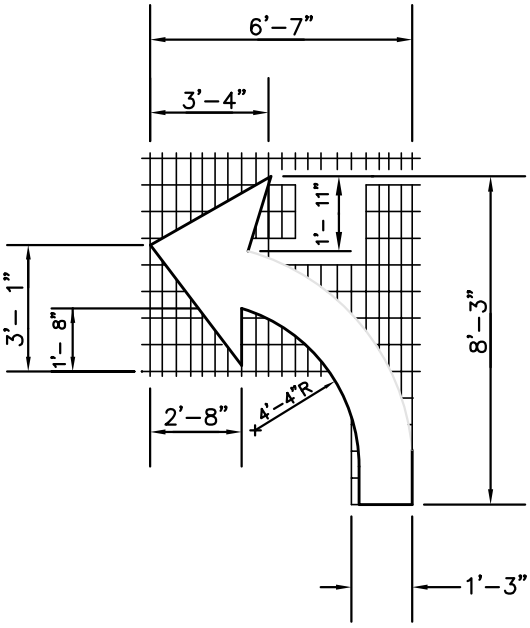

PAVEMENT MARKING ARROWS

NOT TO SCALE

CITY OF CASTLE ROCK			
TURN ARROW DETAILS			
APPROVED: BY CITY DATE			DWG. NO. CR018ST
DATE: 2/06	DRWN: J.H.	CHKD: T.J.O.	SCALE: NONE