CASTLE ROCK WATER DETAILS

STANDARD PLANS FOR WATER SYSTEM CONSTRUCTION	STD. PLAN NO.	DRAWING NAME
1 Standard single service 1 of 3	CROO1W	CROO1W.DWG
2 Standard double service 2 of 3	CROO2W	CROO2W.DWG
3 Service (elevation view) 3 of 3	CROO3W	CROO3W.DWG
4 Fire hydrant	CROO4W	CROO4W.DWG
5 Standard valve box	CROO5W	CROO5W.DWG
6 Service pressure reducing valve	CROO6W	CROO6W.DWG
7 2" temporary blow-off asembly type "A" and "B"	CROO7W	CROO7W.DWG
8 Thrust blocking details 1 of 3	CROO8W	CROO8W.DWG
Thrust blocking details 2 of 3	CROO8W	CROO8W.DWG
Thrust blocking details 3 of 3	CROO8W	CROO8W.DWG
9 1 1/2" and 2" standard setter without by-pass	CROO9W	CROO9W.DWG
10 Combination air vacuum/air release valve	CRO10W	CRO10W.DWG
11 Dead end watermain 2" blow-off assembly	CRO11W	CRO11W.DWG
12 Connection to existing main	CRO12W	CRO12W.DWG
13 Valve marker post and hydrant bollard detail	CRO13W	CRO13W.DWG
14 Typical installations with minimum clearances backflow preventation device assemblies	CRO14W	CRO14W.DWG
15 Compound water meter with by-pass for 3", 4", 6", and 8" size 1 of 2	CRO15W	CRO15W.DWG
Material list for compound water meter with by-pass for 3", 4", 6", and 8" size 2 of 2	CRO15W	CRO15W.DWG
16 FM detector meter with C.T. by-pass and by-pass line for 4", 6", 8" and 10" size1 of 2	CRO16W	CRO16W.DWG
FM detector meter with C.T. by-pass and by-pass line for 4", 6", 8" and 10" size 2 of 2	CRO16W	CRO16W.DWG
17 Vacuum breaker & air relief valve	CRO17W	CRO17W.DWG
18 Sampling station (typical for non-sidewalk installation)	CRO18AW	CRO18AW.DWG
Sampling station (typical for sidewalk installation)	CRO18BW	CRO18BW.DWG
19 Watermain bedding/asphalt restoration detail	CRO19W	CRO19W.DWG

J.W. Morrissette & Associates Inc.
1700 Cooper Point Rd. SW #B2
Olympia, WA 98502-1110
(360) 352-9456 Fax (360) 352-9990
Job # 95112C

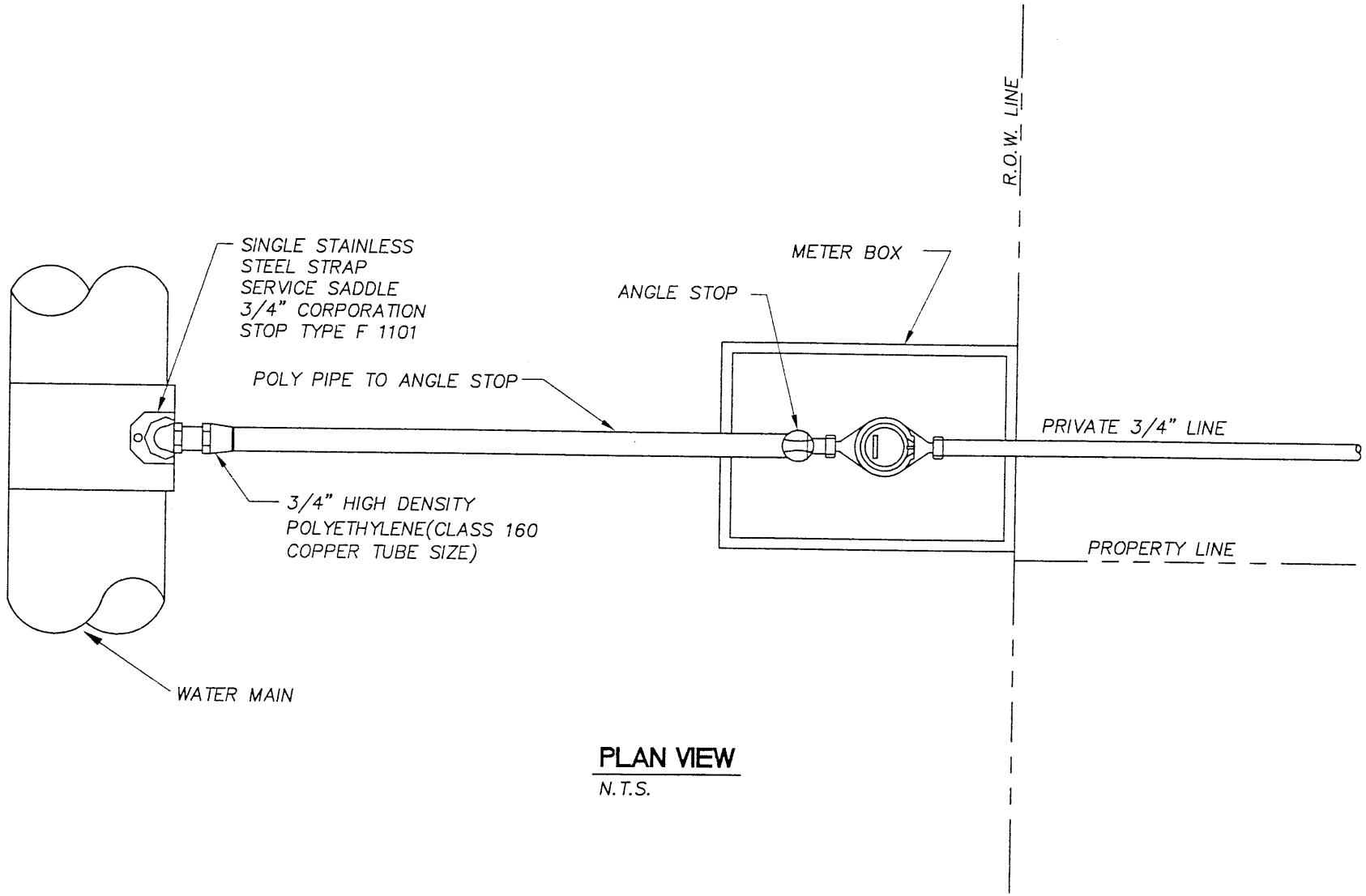

PLAN VIEW

N.T.S.

SHEET 1 OF 3

APPROVED BY	REVISED DATE	CITY OF CASTLE ROCK	STD. PLAN NO.
CITY ENGINEER	07/15/97	STANDARD SINGLE SERVICE	CR001W

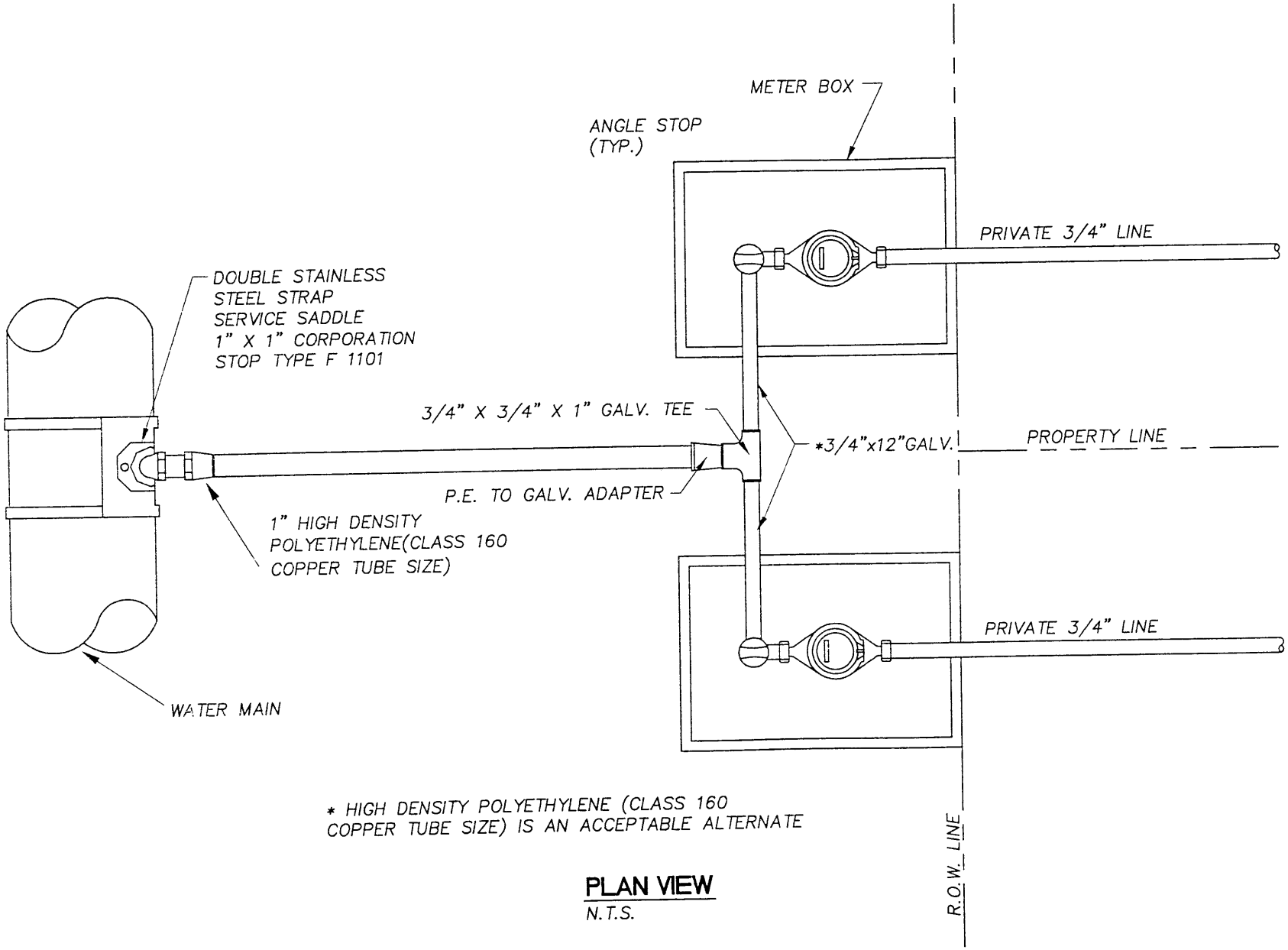

* HIGH DENSITY POLYETHYLENE (CLASS 160 COPPER TUBE SIZE) IS AN ACCEPTABLE ALTERNATE

PLAN VIEW

N.T.S.

SHEET 2 OF 3

APPROVED BY	REVISED DATE	CITY OF CASTLE ROCK	STD. PLAN NO.
CITY ENGINEER	07/15/97	STANDARD DOUBLE SERVICE	CR002W

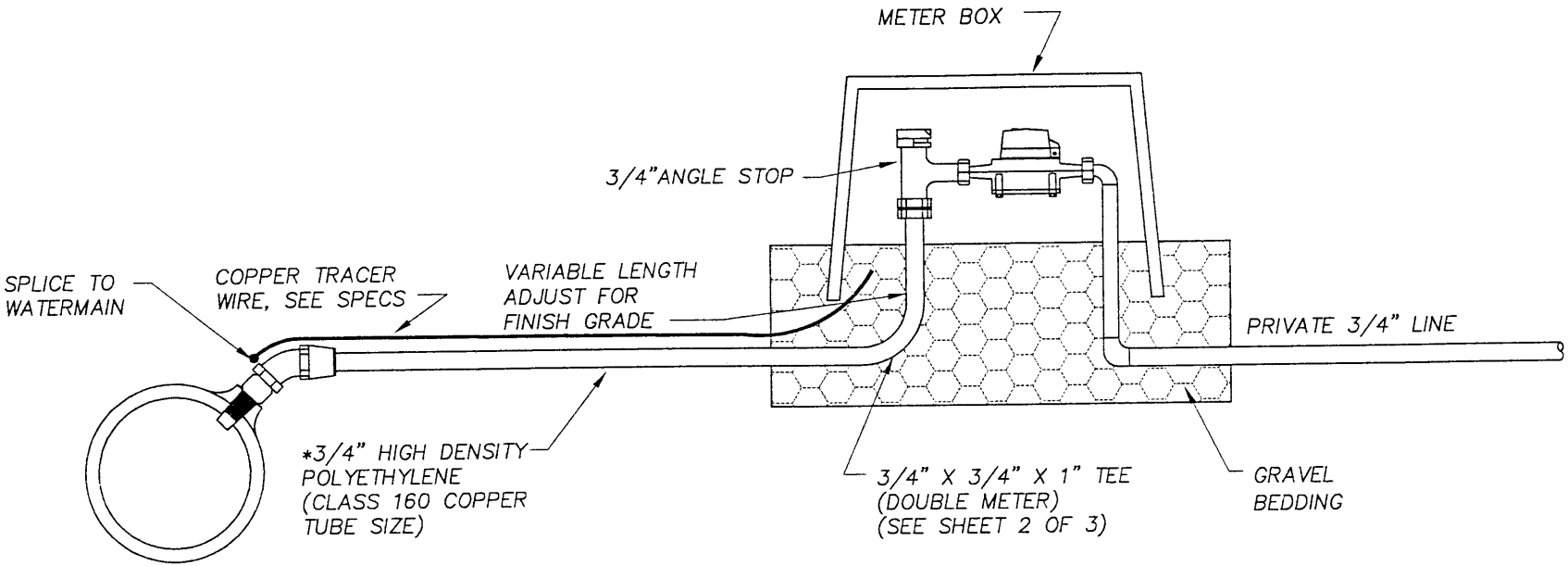

* 1" HIGH DENSITY POLYETHYLENE (CLASS 160 COPPER TUBE SIZE) FOR DOUBLE METER

ELEVATION VIEW

N.T.S.

SHEET 3 OF 3

APPROVED BY	REVISED DATE	CITY OF CASTLE ROCK	STD. PLAN NO.
CITY ENGINEER	07/15/97	SERVICE (ELEVATION VIEW)	CR003W

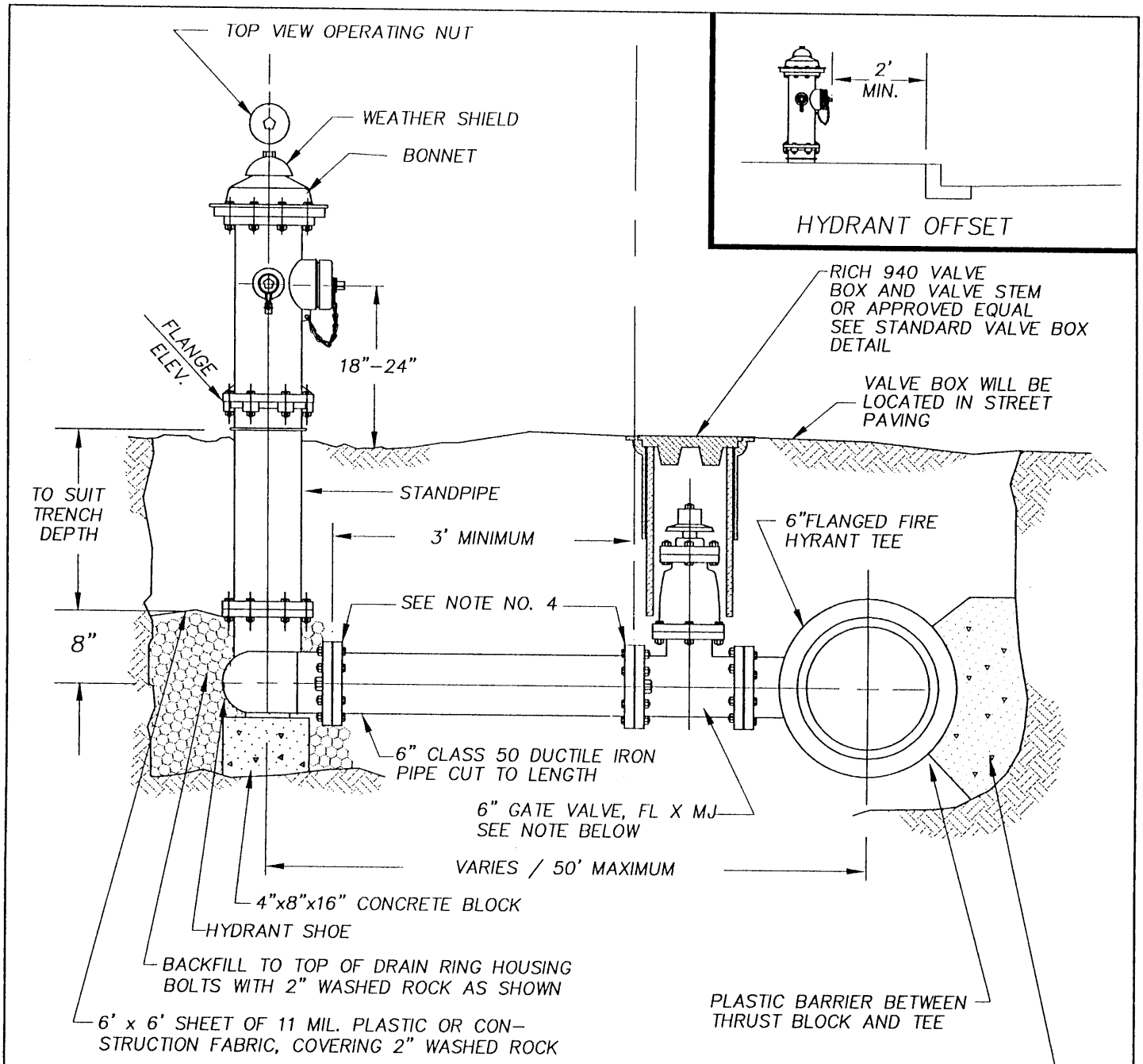

NOTES

1. HYDRANTS SHALL BE WATEROUS PACER MODEL WB67–90.
2. HYDRANTS SHALL BE LOCATED WITH A MINIMUM THREE FOOT RADIUS UNOBSTRUCTED WORKING AREA PROVIDED AROUND ALL HYDRANTS, AND IN NO CASE SHALL BE LOCATED IN SIDEWALK
3. GATE VALVES SHALL BE RESILIENT WEDGE NRS WITH O–RING SEALS. VALVE ENDS SHALL BE MECHANICAL JOINT BY ANSI FLANGES. VALVES SHALL CONFORM TO AWWA 509–80.
4. EACH PIPE JOINT 6" #1106 EBAA IRON, INC. MEGALUG OR APPROVED EQUAL, OR 3/4" RESTRAINING RODS, OR THRUST BLOCKING AS APPROVED.

APPROVED BY	REVISED DATE	CITY OF CASTLE ROCK	STD. PLAN NO.
CITY ENGINEER	07/15/97	FIRE HYDRANT	CR004W

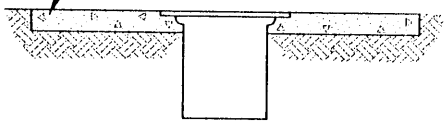

OUTSIDE PAVED AREA

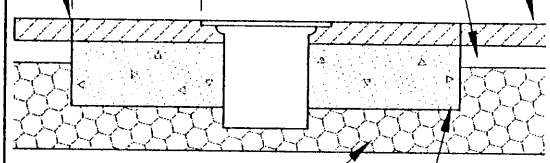

INSIDE PAVED ROADWAY

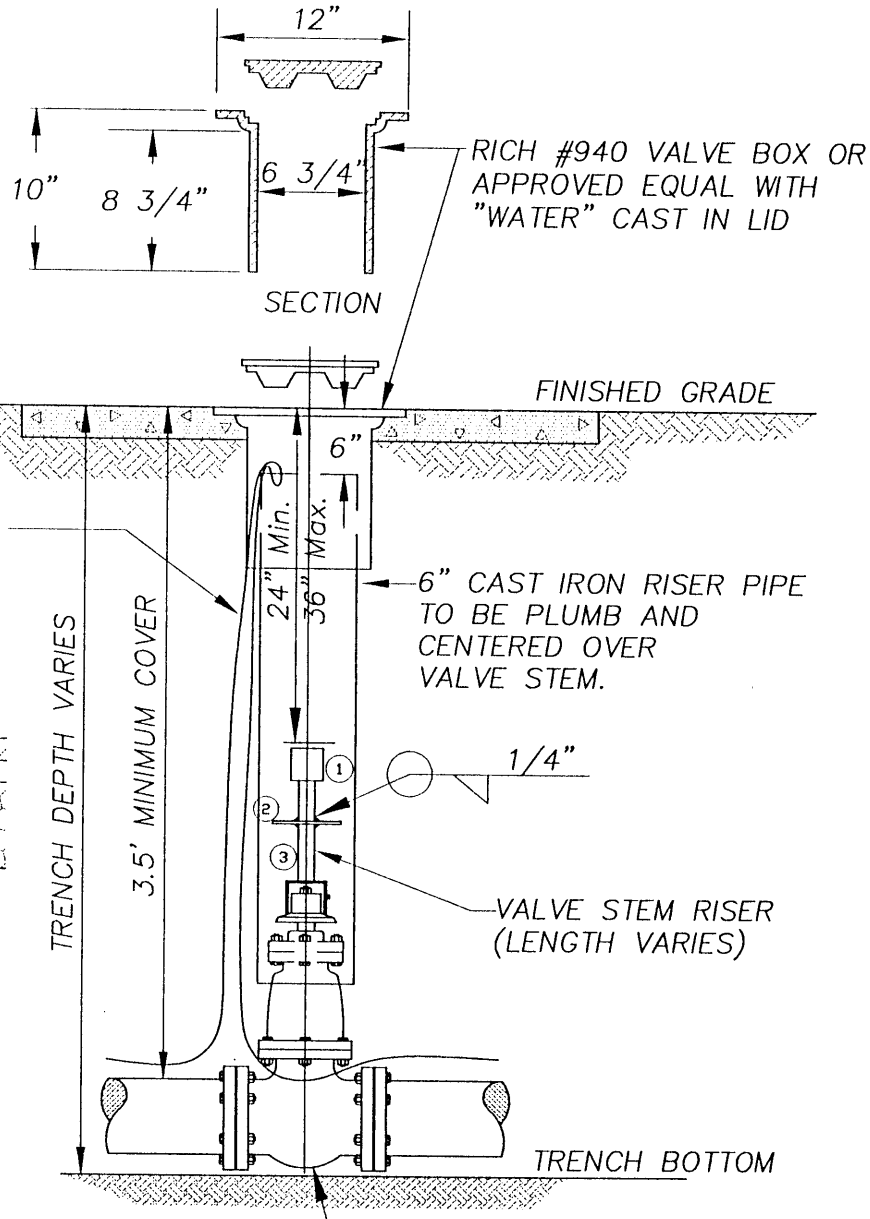

NOTE:

ALL VALVES MUST HAVE 14 GUAGE COATED COPPER TRACER WIRE TIED OFF AT VALVE BODY, EXTENDED OUTSIDE CI. RISER PIPE THEN EXTENDED ONE FOOT TOP OF VALVE BOX.

VALVE STEM EXTENSION LEGEND

1. VALVE OPERATING NUT OR 1 7/8" X 1 7/8" X 2" HIGH GRADE STEEL WELDED TO GUIDE PLATE.
2. 3/16" Thk X 5 1/5" DIA STEEL GUIDE PLATE WELDED TO RISER SHAFT.
3. 2"X2"X 3/16" SQUARE STRUCTURAL STEEL TUBING TO FIT OPERATING NUT. LENGTH AS REQUIRED.

NOTE:

WELD ALL AROUND, AS SPECIFIED ABOVE

APPROVED BY	REVISED DATE	CITY OF CASTLE ROCK	STD. PLAN NO.
CITY ENGINEER	07/15/97	STANDARD VALVE BOX	CR005W

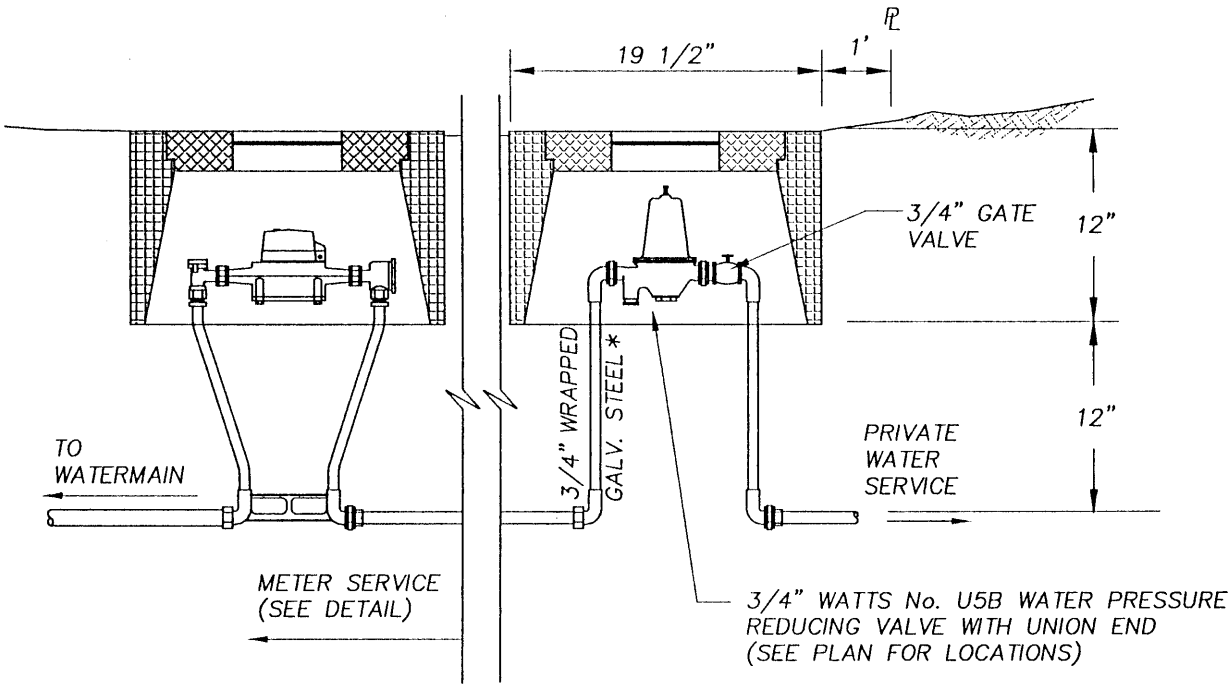

* WRAP ALL GALV. STEEL PIPE BURIED IN THE GROUND W/ "SCOTCHRAP". WRAP ALL STRAIGHT RUNS WITH 0.02-INCH THICK TAPE, SPIRALLY APPLIED IN HALF-LAP LAYERS. WRAP ALL JOINTS, VALVES, AND SIMILAR IRREGULAR SURFACES USING 0.01-INCH THICK TAPE.

APPROVED BY	REVISED DATE	CITY OF CASTLE ROCK	STD. PLAN NO.
CITY ENGINEER	07/15/97	SERVICE PRESSURE REDUCING VALVE	CR006W

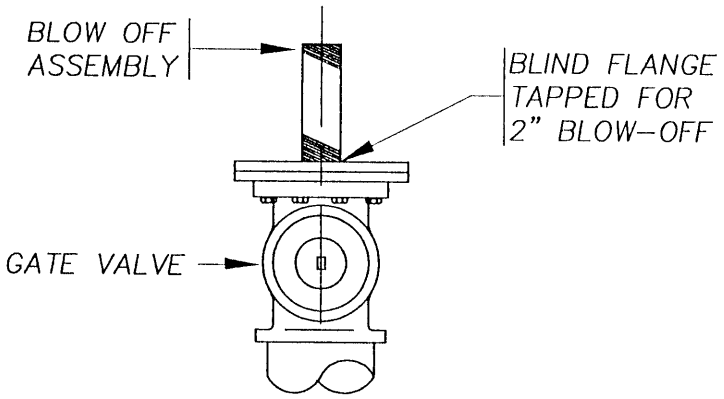

TYPE "A" (END CAP)

DEAD END SYSTEM ONLY

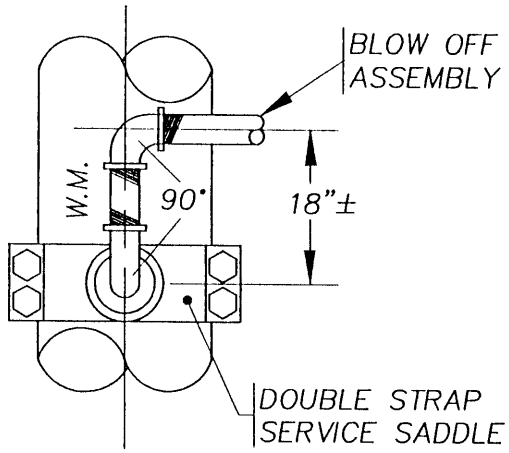

TYPE "B" (TOP/IN-LINE)

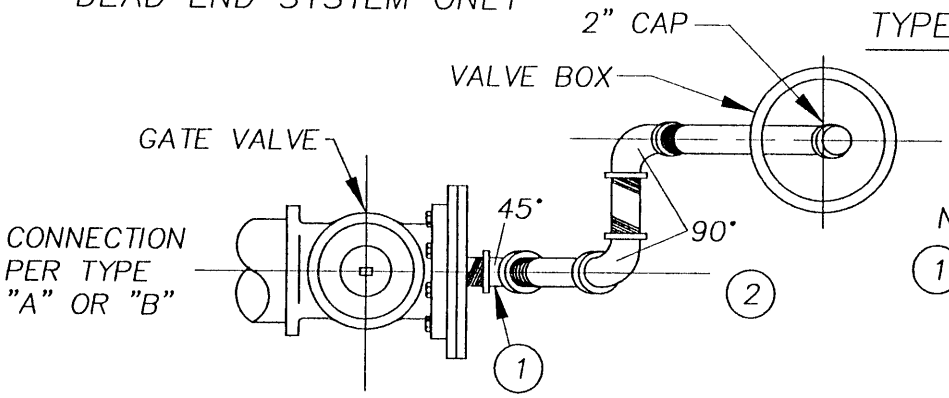

PLAN VIEW

NOTES:

1. LENGTH OF PIPE AS DIRECTED TO EXTEND BLOW-OFF TERMINUS BEYOND EDGE OF PAVEMENT
2. ALL PIPE & FITTINGS TO BE GALVANIZED

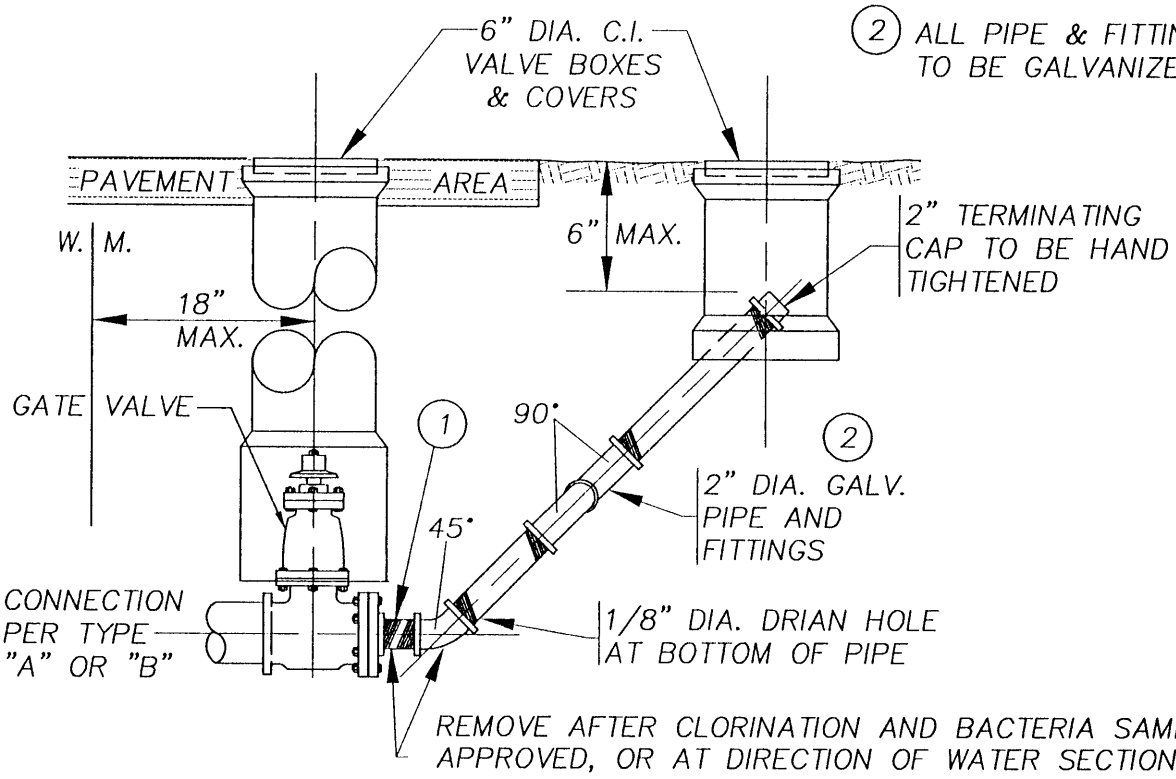

APPROVED BY	REVISED DATE	CITY OF CASTLE ROCK	STD. PLAN NO.
CITY ENGINEER	07/15/97	2" TEMPORARY BLOW-OFF ASSEMBLY TYPE "A" AND "B"	CR007W

THRUST AT FITTINGS IN POUNDS DUE TO WATER PRESSURE

	PRESSURE PSI	TEES DEAD ENDS	90 DEG. BEND	45 DEG BEND	22 1/2 DEG BEND
3"	100	1220	1720	931	474
	150	1330	1880	1020	519
	200	1610	2270	1230	628
4"	100	1940	2750	1490	759
	150	2020	2860	1550	790
	200	2350	3330	1800	919
6"	100	3830	5420	2930	1500
	150	4100	5800	3140	1600
	200	4750	6710	3630	1850
8"	100	6580	9310	5040	2570
	150	6980	9870	5340	2720
	200	7910	11200	6050	3090
10"	50	9820	13900	7510	3830
	100	10300	14600	7890	4020
	150	11300	15900	8620	4400
	200	12300	17400	9450	4810
12	50	13800	19500	10600	5390
	100	14600	20600	11200	5700
	150	15900	22500	12200	6210
	200	17200	24400	13200	6720

SAFE BEARING LOADS

SOIL	SAFE BEARING LOAD (PSF)
MUCK, PEAT, ETC.*	0
SOFT CLAY	1,000
SAND	2,000
SAND AND GRAVEL	3,000
SAND AND GRAVEL CEMENTED WITH CLAY	4,000
HARD SHALE	10,000

*IN MUCK OR PEAT, ALL THRUSTS ARE RESISTED BY PILES OR TIE RODS TO SOLID FOUNDATIONS OR BY REMOVAL OF MUCK OR PEAT AND REPLACEMENT WITH BALLAST OF SUFFICIENT STABILITY TO RESIST THRUSTS.

APPROVED BY	REVISED DATE	CITY OF CASTLE ROCK	STD. PLAN NO.
CITY ENGINEER	07/15/97	THRUST BLOCKING DETAILS	CR008W

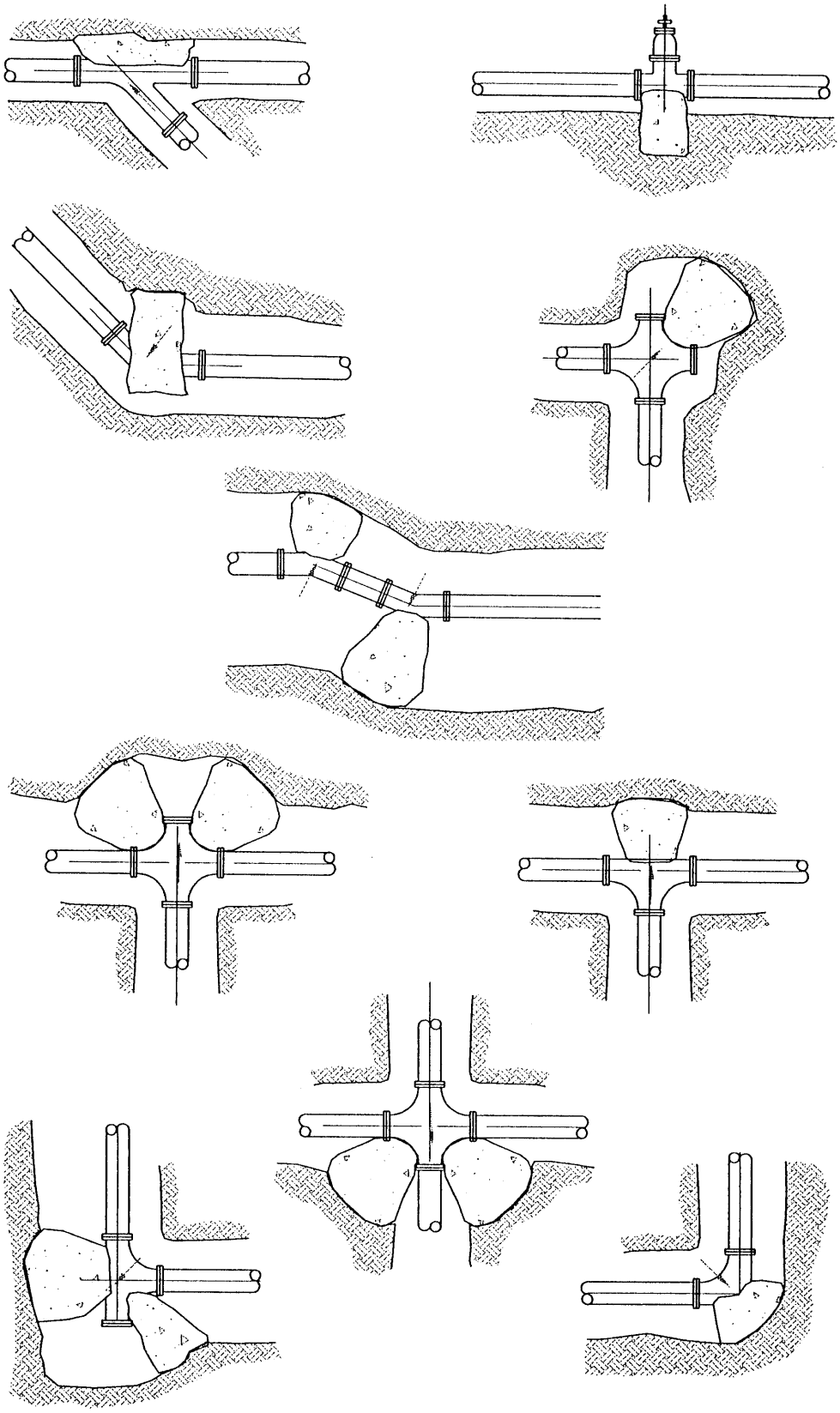

SHEET 2 OF 3

APPROVED BY	REVISED DATE	CITY OF CASTLE ROCK	STD. PLAN NO.
CITY ENGINEER	07/15/97	THRUST BLOCKING DETAILS	CR008W

TYPE "A" BLOCKING FOR 11 1/4° – 30° VERTICAL BENDS						
		V.B.		S	D	L
PIPE SIZE NOM. DIAMETER – INCHES	TEST PRESSURE PSI	VERTICAL BEND DEGREES	NO. OF CU. FT. OF CONC. BLOCKING	SIDE OF CUBE FEET	DIAMETER OF SHACKLE RODS (2) INCHES	DEPTH OF RODS IN CONCRETE FEET
4"	300	11 1/4	8	2	3/4	1.5
		22 1/2	11	2.2		2.0
		30	17	2.6		
6"	300	11 1/4	11	2.2	3/4	2.0
		22 1/2	25	2.9		
		30	41	3.5		
8"	300	11 1/4	16	2.5	3/4	2.0
		22 1/2	47	3.6		
		30	70	4.1		2.5
12"	250	11 1/4	32	3.2	3/4	2.0
		22 1/2	88	4.5		3.0
		30	132	5.1	7/8	

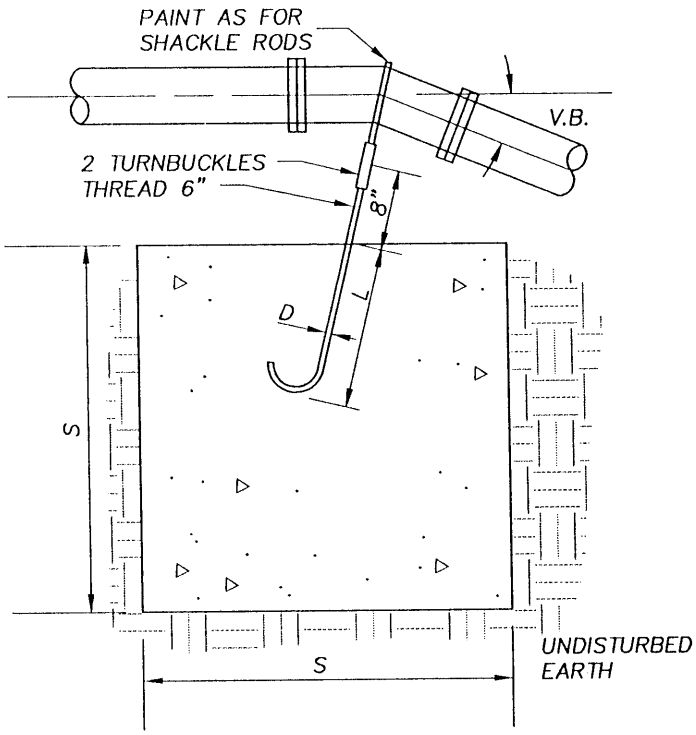

TYPE A BLOCKING

FOR 11 1/4° TO 30° VERTICAL BENDS

TYPE "B" BLOCKING FOR 45° VERTICAL BENDS						
		V.B.		S	D	L
PIPE SIZE NOM. DIAMETER – INCHES	TEST PRESSURE PSI	VERTICAL BEND DEGREES	NO. OF CU. FT. OF CONC. BLOCKING	SIDE OF CUBE FEET	DIAMETER OF SHACKLE RODS (4) INCHES	DEPTH OF RODS IN CONCRETE FEET
4"	300	45	30	3.1	3/4	2.0
6"			68	4.1		
8"			123	5.0		
12"	250		232	6.1		2.5

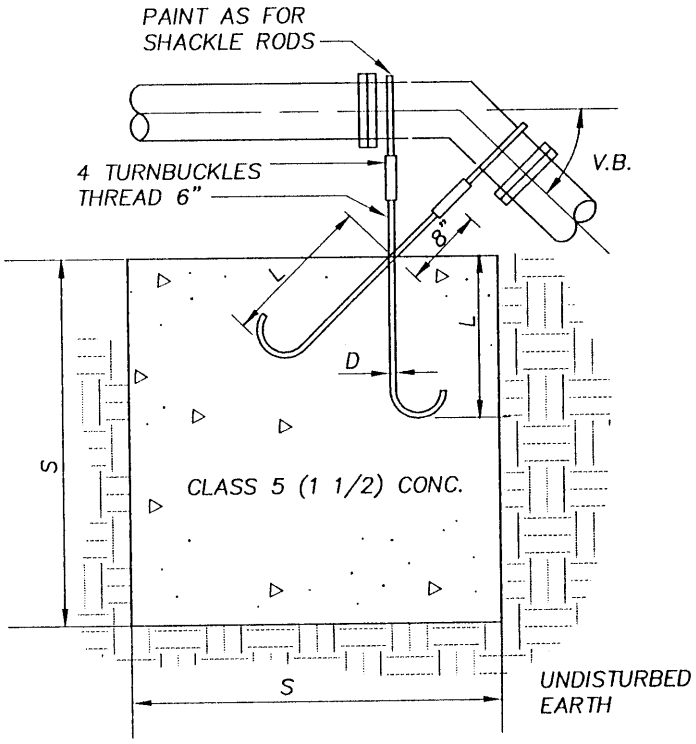

TYPE B BLOCKING

FOR 45° VERTICAL BENDS

SHEET 3 OF 3

APPROVED BY	REVISED DATE	CITY OF CASTLE ROCK	STD. PLAN NO.
CITY ENGINEER	07/15/97	THRUST BLOCKING DETAILS	CR008W

SIZE	A	B
1 1/2"	13 1/4"	18"
2"	17 1/4"	18"

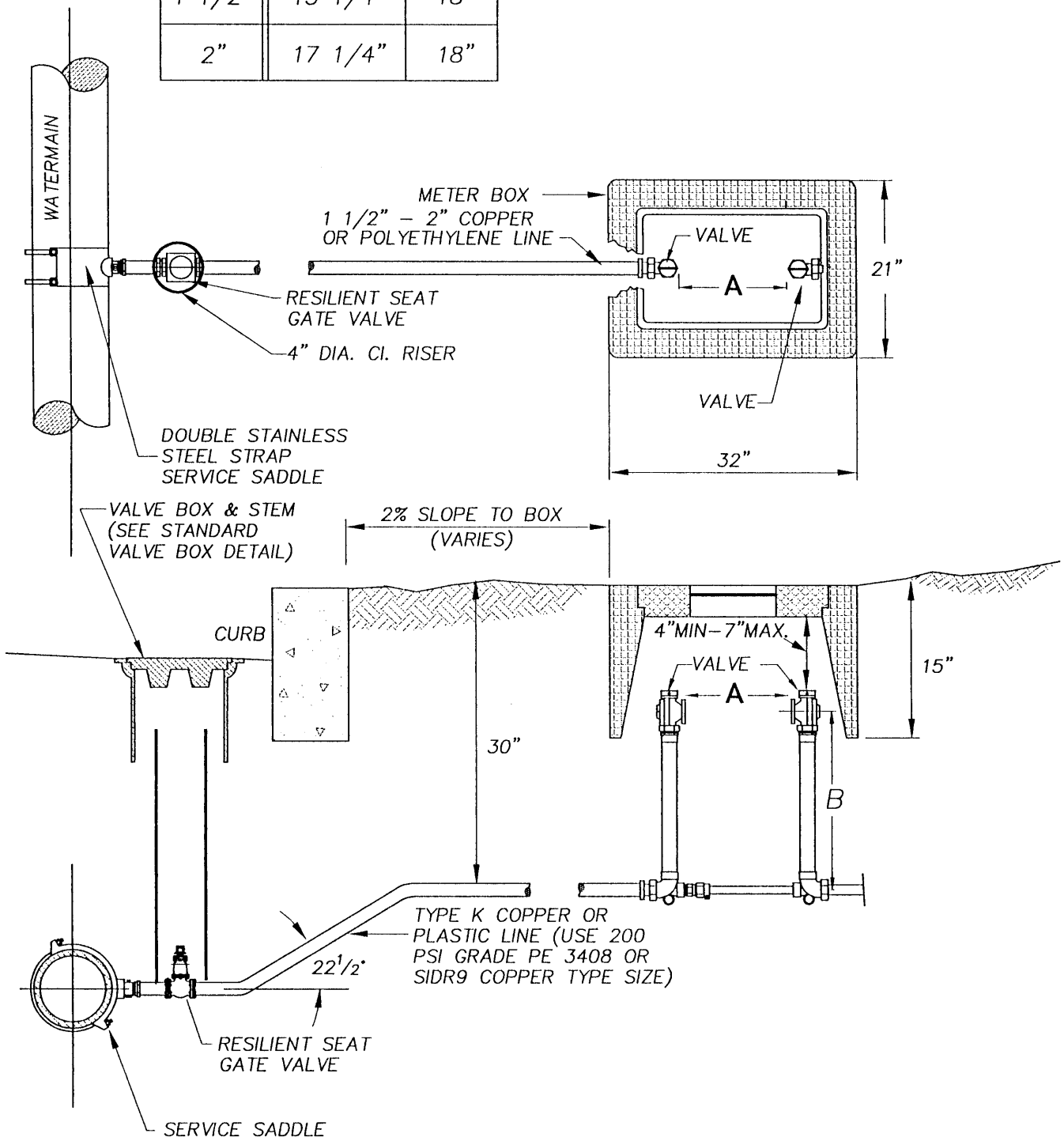

CITY STANDARD FOR COPPER SETTERS ARE:
1 1/2" – FORD VVB66–18x13–1/4 OR EQUAL
2" – FORD VVB77–18x17–1/4 OR EQUAL

NOTES:
1. ALL SERVICE SADDLES SHALL HAVE RUBBER GASKET AND I.P. THREADS.

APPROVED BY	REVISED DATE	CITY OF CASTLE ROCK	STD. PLAN NO.
CITY ENGINEER	07/15/97	1 1/2" AND 2" STANDARD SETTER WITHOUT BYPASS	CR009W

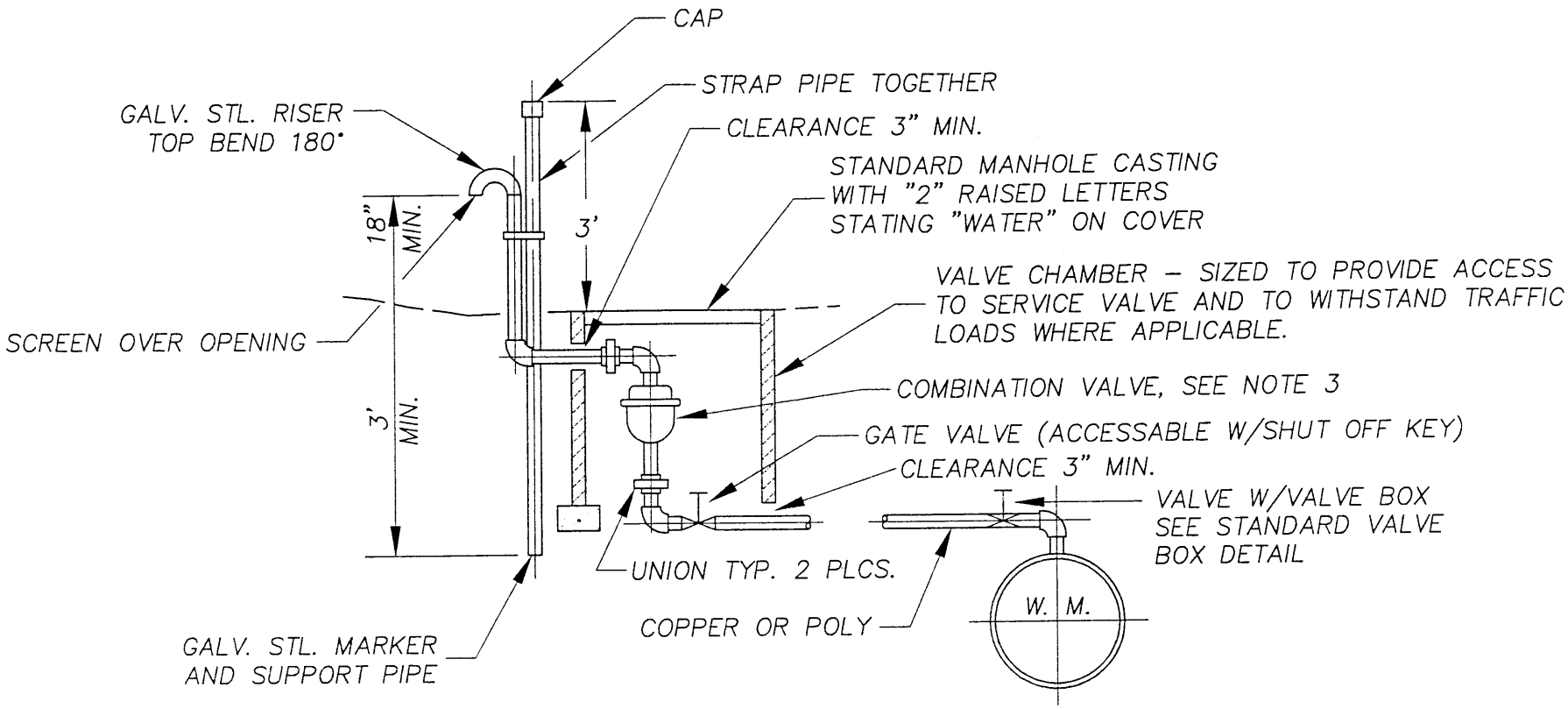

NOTES:

1. IF NOT SPECIFIED, SIZE OF PIPE TO BE SUBMITTED TO PUBLIC WORKS DEPT. FOR APPROVAL
2. SUBMIT SHOP DRAWINGS OF VALVE CHAMBER FOR APPROVAL
3. COMBINATION A.V./A.R. VALVE SHALL BE APCO 143C, 145C, 147C,149C OR EQUAL AS DICTATED BY SIZE OF WATER MAIN

APPROVED BY	REVISED DATE	CITY OF CASTLE ROCK	STD. PLAN NO.
CITY ENGINEER	07/15/97	COMBINATION AIR VACUUM/AIR RELEASE VALVE	CR010W

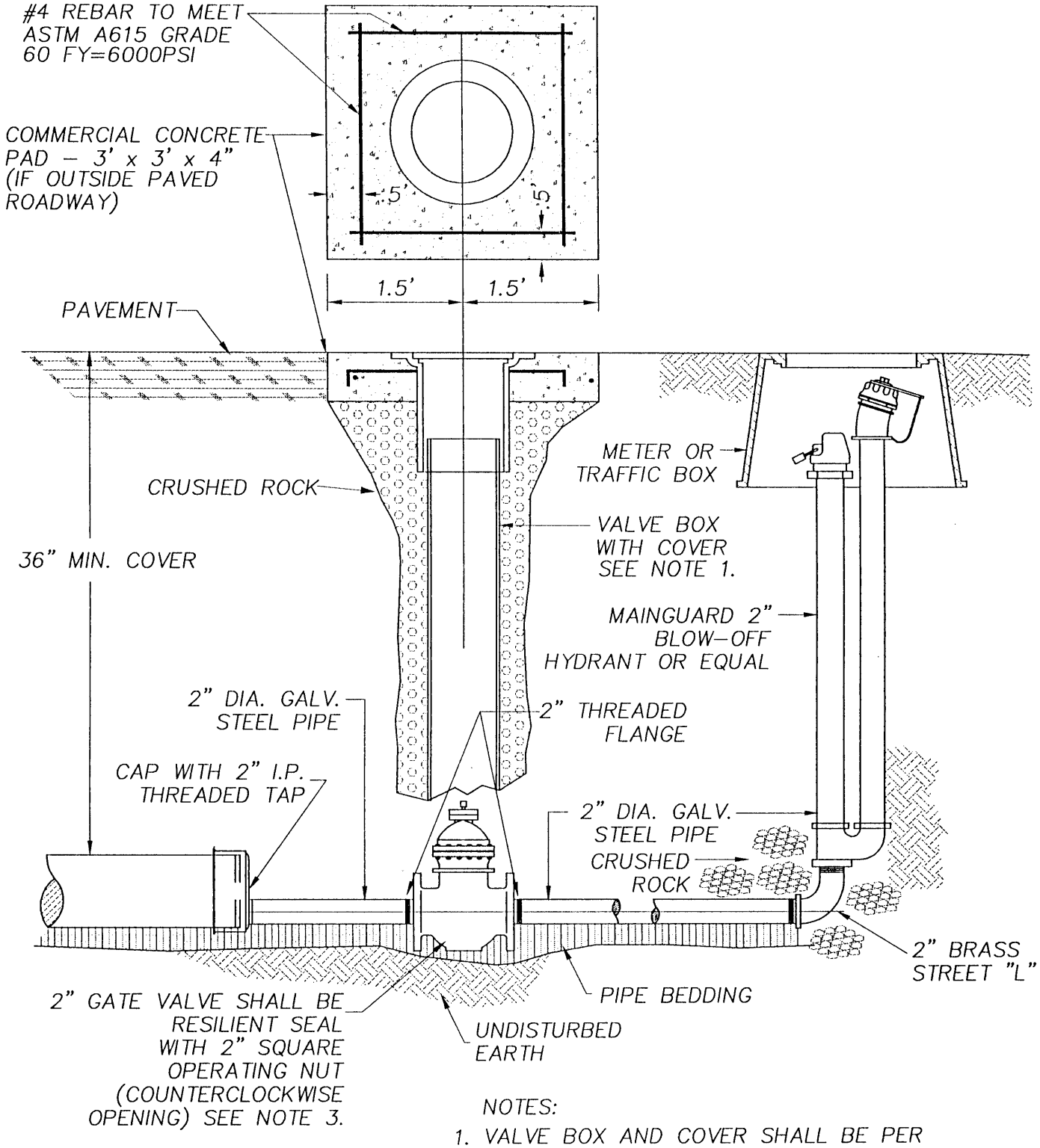

NOTES:

1. VALVE BOX AND COVER SHALL BE PER VALVE BOX DETAIL
2. LOCATE BLOW–OFF HYDRANT OUTSIDE ROADWAY LOCATE VALVE WITHIN ROADWAY
3. ON WATERMAINS WHICH WILL BE EXTENDED IN THE FUTURE, THE VALVE WHICH OPERATES THE BLOWOFF ASSEMBLY SHALL BE THE SAME SIZE AND PROVIDED WITH A CONCRETE THRUST BLOCK.

APPROVED BY	REVISED DATE	CITY OF CASTLE ROCK	STD. PLAN NO.
CITY ENGINEER	07/15/97	DEAD END WATERMAIN 2" BLOWOFF ASSEMBLY	CR011W

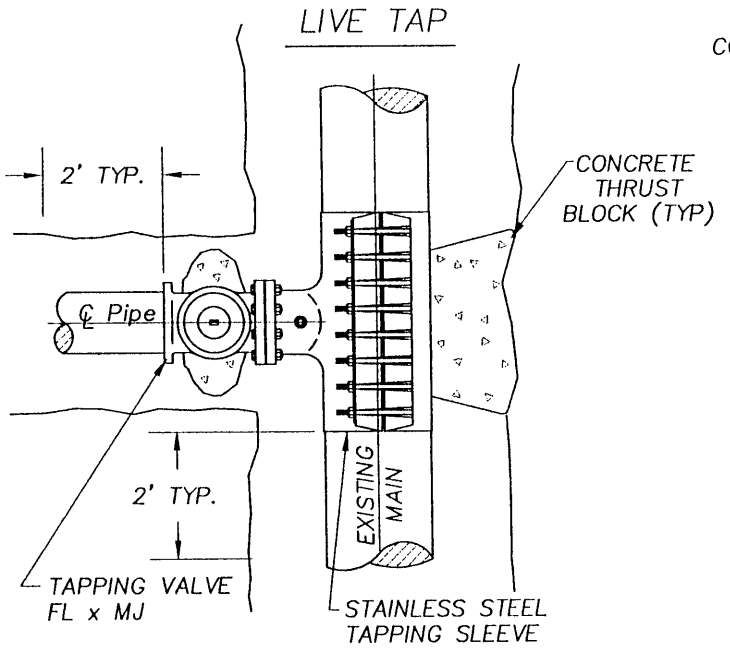

VALVE AND SLEEVE SHALL BE SUPPORTED AND BACKFILLED AS SHOWN BELOW-RIGHT.

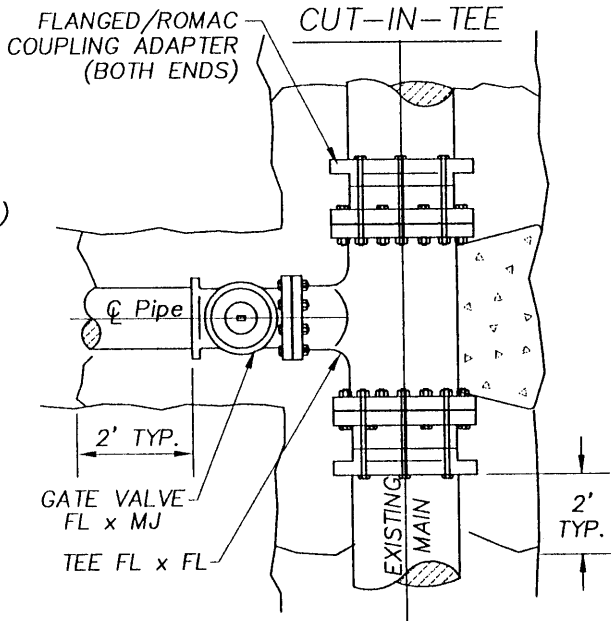

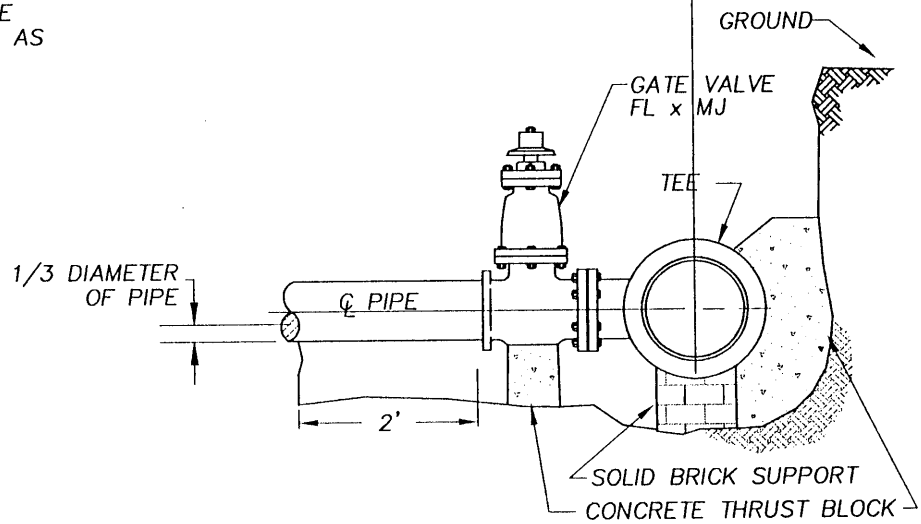

NOTES:

1. 11 MIL PLASTIC OR CONSTRUCTION FABRIC SHALL BE WRAPPED AROUND PIPE AND FITTINGS BEFORE THRUST BLOCKS ARE POURED.

2. SUPPORT VALVE AND SLEEVE CONTINUOUSLY THROUGH INSTALLATION.

APPROVED BY	REVISED DATE	CITY OF CASTLE ROCK	STD. PLAN NO.
CITY ENGINEER	07/15/97	CONNECTION TO EXISTING MAIN	CR012W

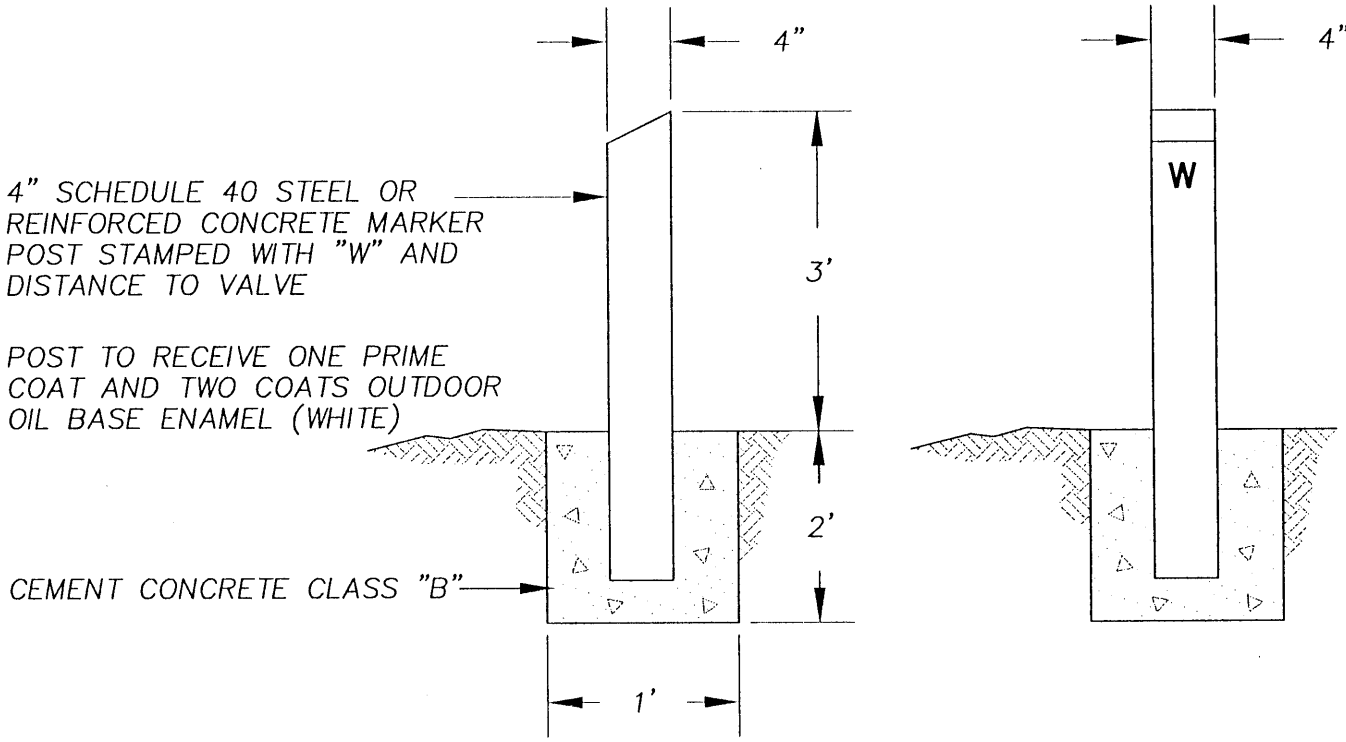

VALVE MARKER POST

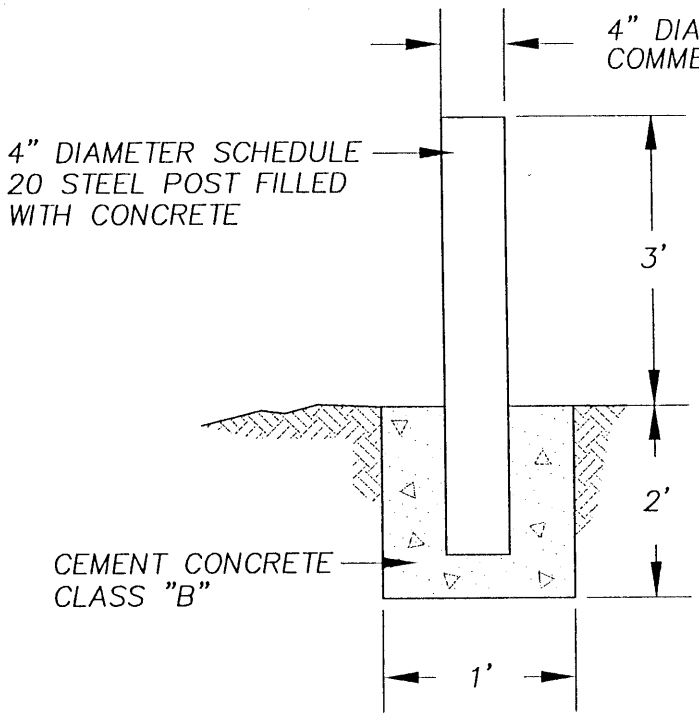

NOTE:

1. LOCATE POSTS 3' FROM HYDRANT DO NOT BLOCK HYDRANT PORTS
2. PIPE TO RECEIVE ONE PRIME COAT AND TWO COATS OUTDOOR OIL BASE ENAMEL (SAME COLOR AS HYDRANT– SEE FIRE HYDRANT DETAIL)
3. FOR REMOTE LOCATIONS
4. THIS HYDRANT BOLLARD DETAIL APPLIES WHEN THE BOLLARD IS 10' OR MORE OFF THE TRAVELLED EDGE OF ROADWAY

HYDRANT BOLLARD

APPROVED BY	REVISED DATE	CITY OF CASTLE ROCK	STD. PLAN NO.
CITY ENGINEER	07/15/97	VALVE MARKER POST AND HYDRANT BOLLARD DETAIL	CR013W

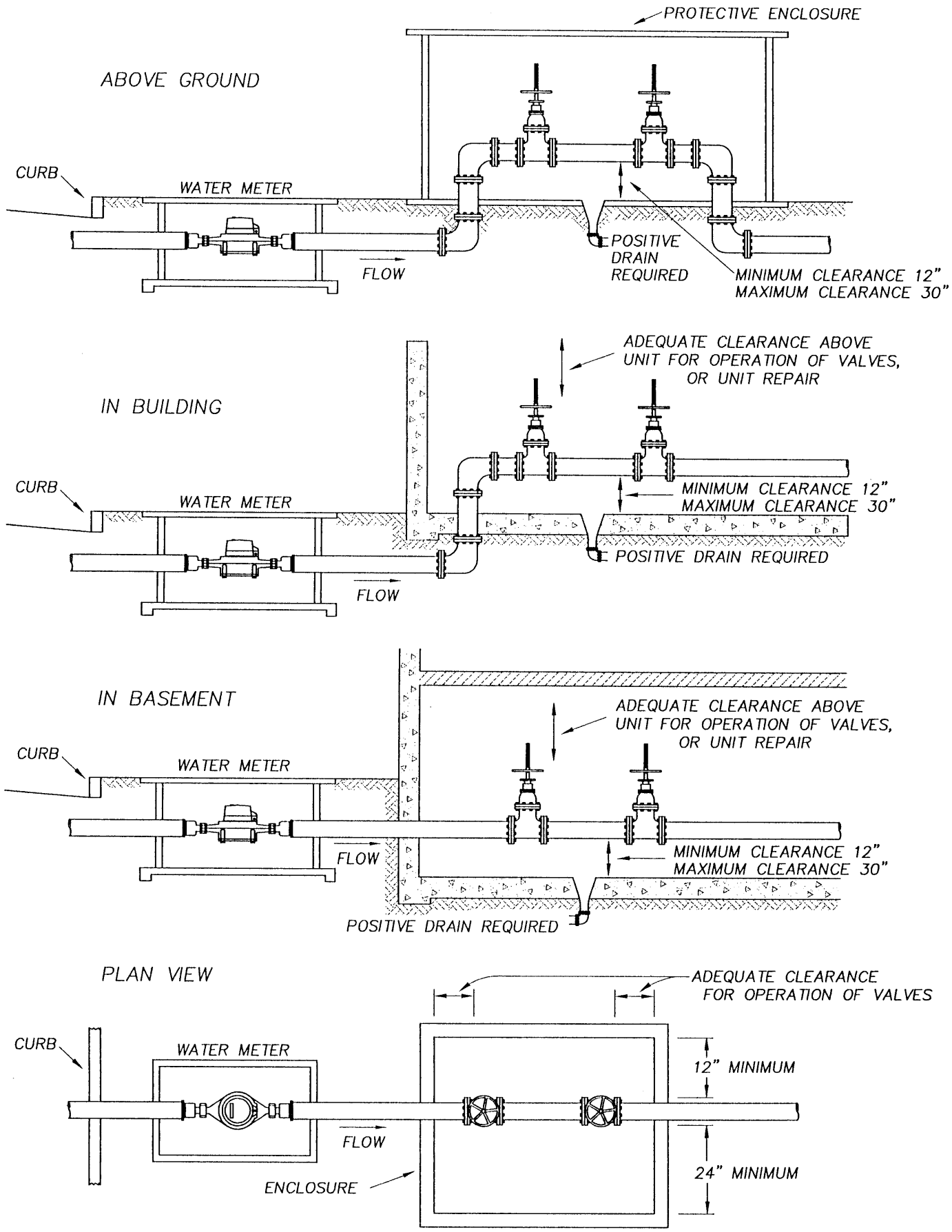

APPROVED BY	REVISED DATE	CITY OF CASTLE ROCK	STD. PLAN NO.
CITY ENGINEER	07/15/97	TYPICAL INSTALLATIONS WITH MINIMUM CLEARANCES BACKFLOW PREVENTION DEVICE ASSEMBLIES	CR014W

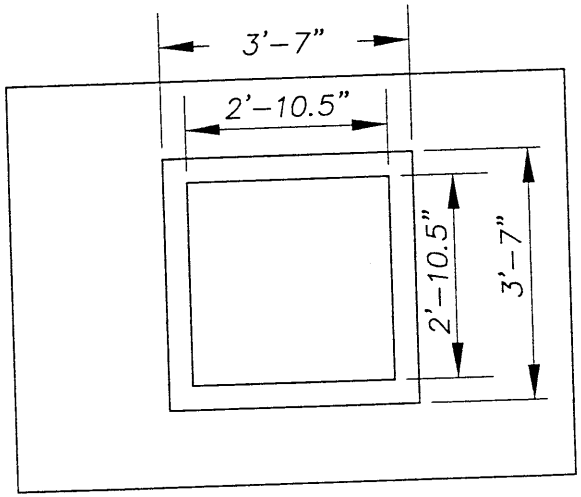

LID COVER

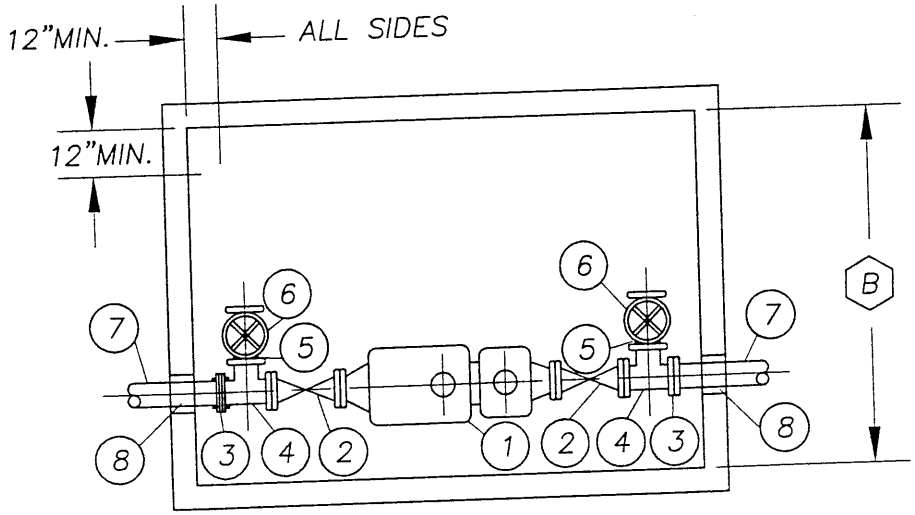

PLAN

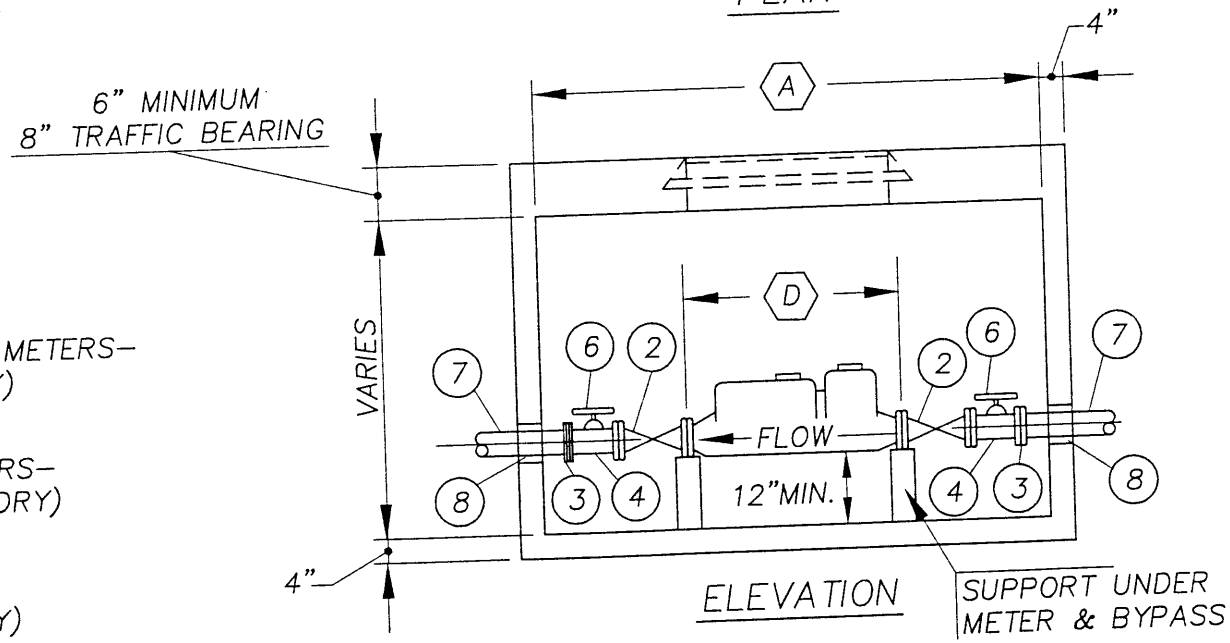

ELEVATION

NOTES:

- FOR NON-TRAFFIC BEARING 3" & 4" METERS- LID COVER #5736 (OLYMPIC FOUNDRY) OR EQUAL.
- FOR TRAFFIC BEARING 3" & 4" METERS- LID COVER #5737-H (OLYMPIC FOUNDRY) OR EQUAL.
- FOR 6" & 8" METERS- LID COVER #5739 (OLYMPIC FOUNDRY) OR EQUAL.

SHEET 1 OF 2

APPROVED BY	REVISED DATE	CITY OF CASTLE ROCK	STD. PLAN NO.
CITY ENGINEER	07/15/97	COMPOUND WATER METER WITH BYPASS FOR 3", 4", 6" AND 8" SIZE	CR015W

3–INCH METER INSTALLATION

1. 3" Compound Meter – * Sensus W/Remote Read
2. 3" FLG Valve with Hand Wheel
3. 3" Flex by Flange Coupling
4. 3" X 1–1/2" Tapped FLG Tee C.I.
5. 1–1/2" Close Nipple G.I.P.
6. 1–1/2" SCR End Hand Wheel Valve (Jones#J372)
7. 3" X 36" Lgth. Threaded Both Ends G.I.P.
8. 6" Sleeve
   A = 86"; B = 68"; D = 24"

4–INCH METER INSTALLATION

1. 4" Compound Meter – * Sensus W/Remote Read
2. 4" FLG Valve with Hand Wheel
3. 4" Flex by Flange Coupling
4. 4" X 2" Tapped FLG Tee C.I.
5. 2" Close Nipple G.I.P.
6. 2" SCR End Hand Wheel Valve (Jones#372)
7. 4" X 36" Lgth. Threaded Both Ends G.I.P.
8. 6" Sleeve
   A = 91"; B = 70"; D = 29"

6–INCH METER INSTALLATION

1. 6" Compound Meter – * Sensus W/Remote Read
2. 6" FLG Valve with Hand Wheel
3. 6" Flex by Flange Coupling
4. 6" X 4" Tapped FLG Tee C.I.
5. 4" Close Nipple C.I. Pipe
6. 4" SCR End Hand Wheel Valve
7. 6" X 36" Lgth. Piece C.I. Pipe Threaded
8. 8" Sleeve
   A = 114"; B = 78"; D = 36–1/2"

8–INCH METER INSTALLATION

1. 8" Compound Meter – * Sensus W/Remote Read
2. 8" FLG Valve with Hand Wheel
3. 8" Flex by Flange Coupling
6. 8" X 6" Tapped FLG Tee C.I.
5. 6" Close Nipple C.I. Pipe
6. 6" SCR End Hand Wheel Valve
7. 8" X 36" Lgth. Piece C.I. Pipe Threaded
8. 10" Sleeve
   A = 136"; B = 116"; D = 53"

* ANY WATER METER FITTED WITH THE HEXAGRAM MODULE THAT IS SUBMERSIBLE AND SELF POWERED.

NOTES:
- DRAINAGE MUST BE PROVIDED FOR METER PIT.
- PIPE LENGTHS MAY BE CHANGED DUE TO VARYING LENGTHS IN METERS USED.
- METER PIT MAY BE EXTENDED WHEN P.R.V. IS REQUIRED.
- ON ALL METERS 3" AND ABOVE A FLEX–COUPLING SHALL BE INSTALLED IN THE OUTLET LINE WITHIN THE METER BOX.
- REMOTE SHALL VE LOCATED IN A READILY ACCESSIBLE AREA OUTSIDE THE VAULT AS APPROVED BY THE CITY OF CASTLE ROCK.
- REMOTE SHALL BE INSTALLED BY THE CITY OF CASTLE ROCK AT THE CONTRACTOR'S EXPENSE.

APPROVED BY	REVISED DATE	CITY OF CASTLE ROCK	STD. PLAN NO.
CITY ENGINEER	07/15/97	MATERIAL LIST FOR COMPOUND WATER METER WITH BY-PASS FOR 3", 4", 6" AND 8" SIZE	CR015W

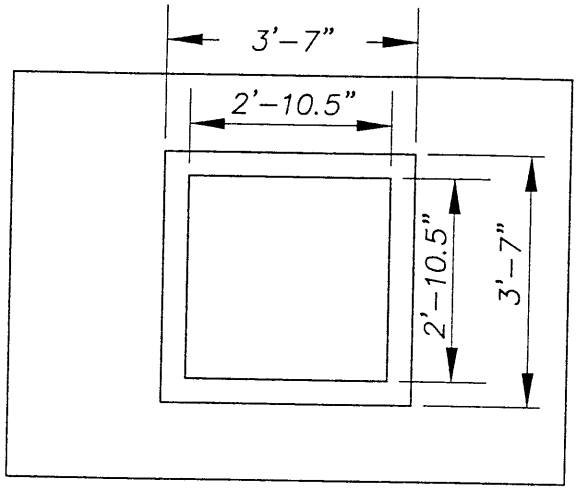

LID COVER

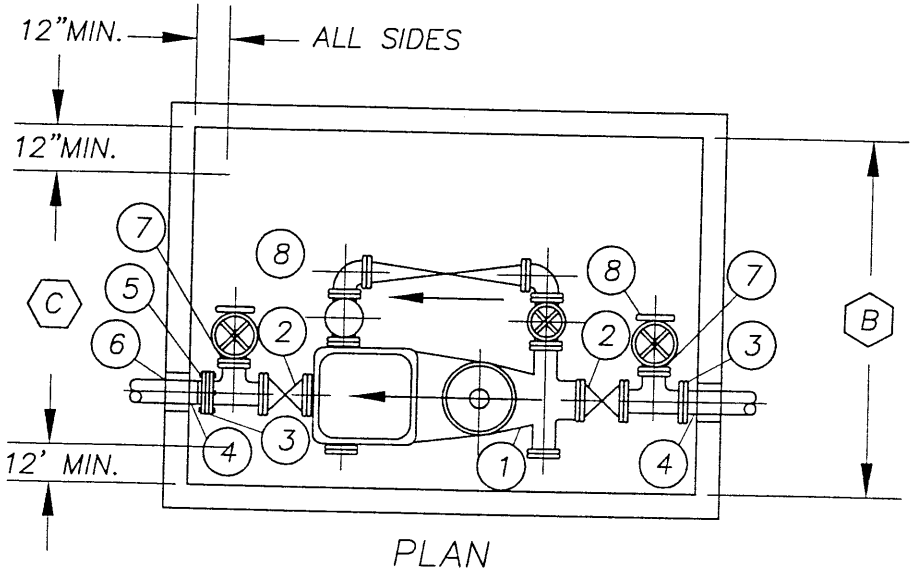

PLAN

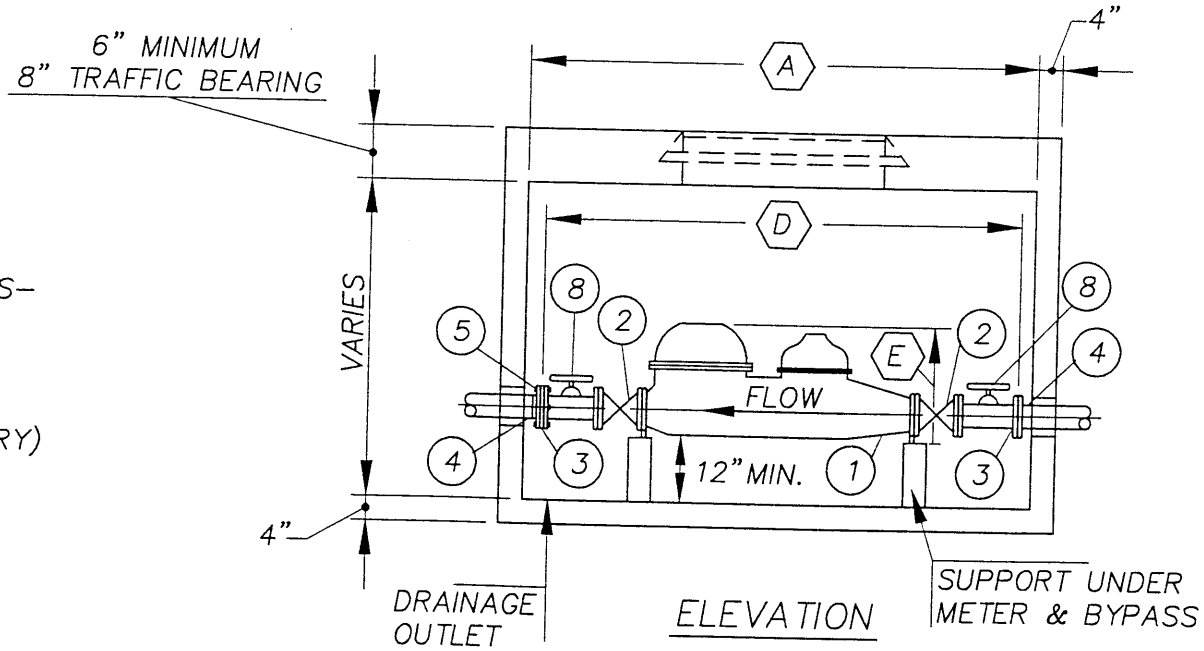

ELEVATION

NOTES:

- FOR NON-TRAFFIC BEARING 4" METERS- LID COVER #5736 (OLYMPIC FOUNDRY) OR EQUAL.
- FOR TRAFFIC BEARING 4" METERS- LID COVER #5737-H (OLYMPIC FOUNDRY) OR EQUAL.
- FOR 6" & 8" METERS- LID COVER #5739 (OLYMPIC FOUNDRY) OR EQUAL.

SHEET 1 OF 2

APPROVED BY	REVISED DATE	CITY OF CASTLE ROCK	STD. PLAN NO.
CITY ENGINEER	07/15/97	F.M. DETECTOR METER WITH C.T. BY-PASS AND BY-PASS LINE FOR 4", 6", 8" AND 10" SIZE	CR016W

FM–CT
MATERIAL LIST

4–INCH

1. 4" FM Detector Meter with By–Pass and By–Pass line – Sensus
2. 4" FLG Valve with Hand Wheel
3. 4" Flex x Flange Coupling
4. 4" x 36" G.I.P. Threaded Both Ends
5. 4" Flex x Flange Adapter
6. 6" Sleeve through Wall (Ductile Iron)
7. 2" Close Nipple G.I.P.
8. 2" SCR End Hand Wheel Valve (Jones#372)

A = 88"; B = 76"; C = 52"
D = 64"; E = 24–3/4"

6–INCH

1. 6" FM Detector Meter with By–Pass and By–Pass line – Sensus
2. 6" FLG Valve with Hand Wheel
3. 6" Flex x Flange Coupling
4. 6" x 36" G.I.P. Threaded Both Ends
5. 4" Flex x Flange Adapter
6. 8" Sleeve through Wall (Ductile Iron)
7. 4" Close Nipple C.I. Pipe
8. 4" SCR End Hand Wheel Valve

A = 106"; B = 84"; C = 59–1/4"
D = 82"; E = 31–1/4"

8–INCH

1. 8" FM Detector Meter with CT By–Pass and By–Pass line – Sensus
2. 8" FLG Valve with Hand Wheel
3. 8" Flex x Flange Coupling
4. 8" x 36" G.I.P. Threaded Both Ends
5. 4" Flex x Flange Adapter
6. 10" Sleeve through Wall (Ductile Iron)
7. 6" Close Nipple C.I. Pipe
8. 6" SCR End Hand Wheel Valve

A = 118"; B = 93"; C = 68–3/4"
D = 94"; E = 40–1/4"

10–INCH

1. 10" FM Detector Meter with By–Pass and By–Pass line – Sensus
2. 10" FLG Valve with Hand Wheel
3. 10" Flex x Flange Coupling
4. 10" x 36" G.I.P. Threaded Both Ends
5. 4" Flex x Flange Adapter
6. 12" Sleeve through Wall (Ductile Iron)
7. 6" Close Nipple C.I. Pipe
8. 6" SCR End Hand Wheel Valve

A = 140"; B = 107"; C = 82–1/4"
D = 116"; E = 48–1/2"

NOTES:

- DRAINAGE MUST BE PROVIDED FOR METER PIT
- PIPE LENGTHS MAY BE CHANGED DUE TO VARYING LENGTHS IN METERS USED
- METER PIT MAY BE EXTENDED WHEN P.R.V. IS REQUIRED
- ON ALL METER 3" AND ABOVE A FLEX–COUPLING SHALL BE INSTALLED IN THE OUTLET LINE WITHIN THE METER BOX.

APPROVED BY	REVISED DATE	CITY OF CASTLE ROCK	STD. PLAN NO.
CITY ENGINEER	07/15/97	F.M. DETECTOR METER WITH C.T. BY-PASS AND BY-PASS LINE FOR 4", 6", 8" AND 10" SIZE	CR016W

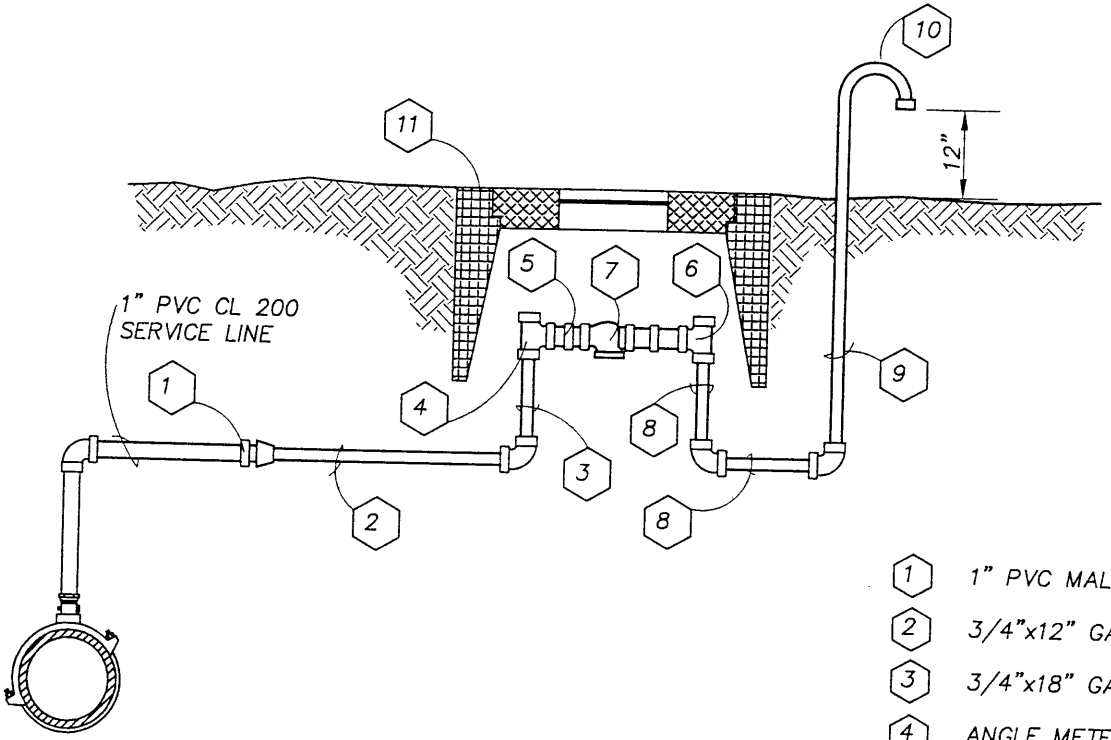

1. 1" PVC MALE ADAPTOR WITH 1"x3/4" GALV. BELL REDUCER
2. 3/4"x12" GALV. NIPPLE
3. 3/4"x18" GALV. NIPPLE
4. ANGLE METER STOP W/1" SWIVEL NUT OUTLET
5. NEOPRENE METER GASKET
6. 90° METER ELL W/SWIVEL NUT
7. 1" SWING CHECK VALVE (UP-SIDE DOWN) WITH TWO 1"xCLOSE GALV. NIPPLES
8. 3/4"x10" GALV. NIPPLE
9. 3/4" GALV. RISER PIPE
10. 3/4" GALV. RETURN END WITH SCREEN
11. METER BOX

APPROVED BY	REVISED DATE	CITY OF CASTLE ROCK	STD. PLAN NO.
CITY ENGINEER	07/15/97	VACUUM BREAKER AND AIR RELIEF VALVE	CR017W

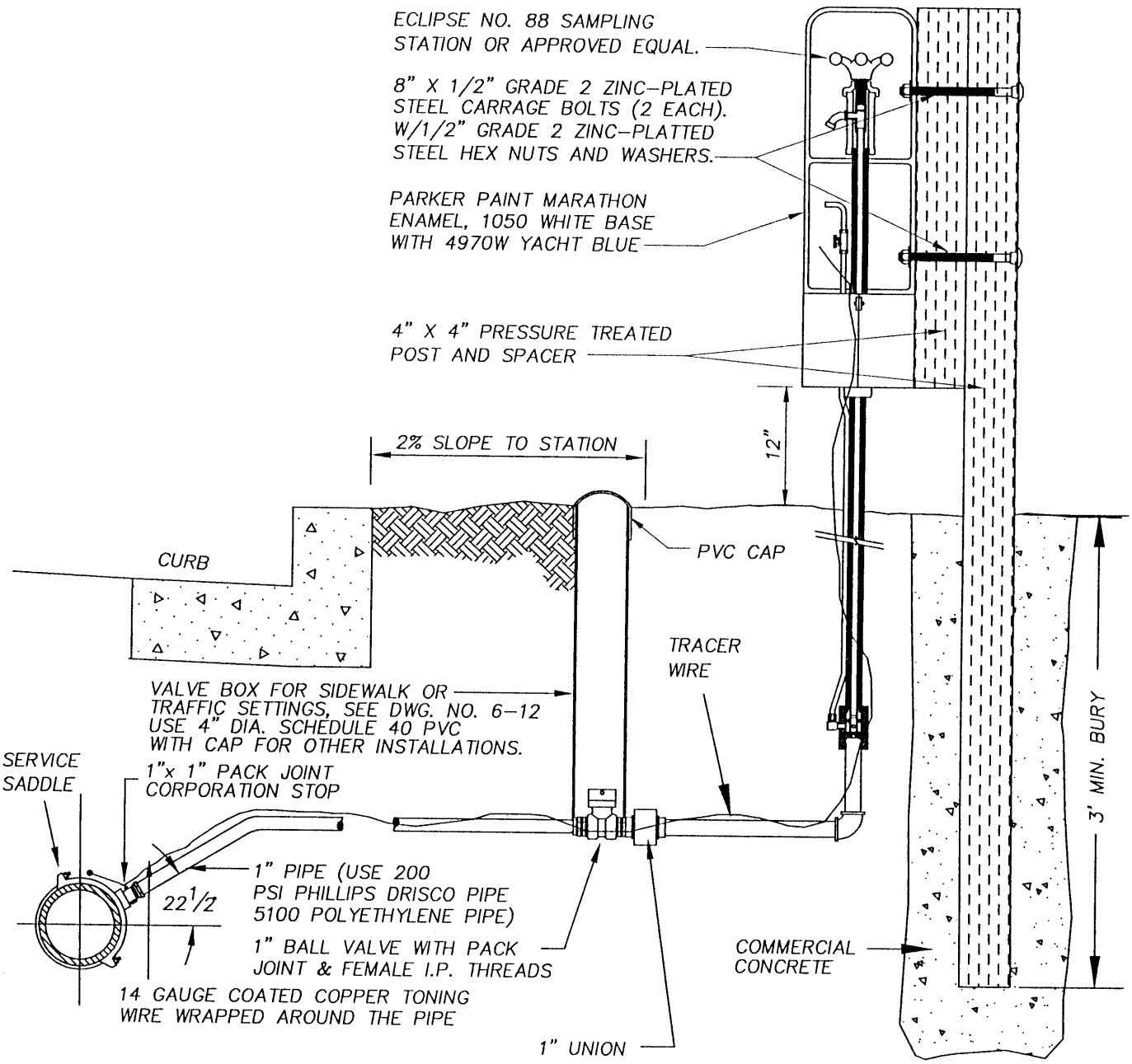

NOTES:

1. STAINLESS STEEL INSERTS REQUIRED FOR ALL PACK JOINTS.
2. ALL SERVICE SADDLES SHALL HAVE RUBBER GASKET AND I.P. THREADS.
3. SEE DIRECTOR OF PUBLIC WORKS FOR USE OF SAMPLING TYPE CR018AW OR CR018BW.

APPROVED BY	REVISED DATE	CITY OF CASTLE ROCK	STD. PLAN NO.
CITY ENGINEER	07/15/97	SAMPLING STATION (TYPICAL FOR NON-SIDEWALK INSTALLATION)	CR018AW

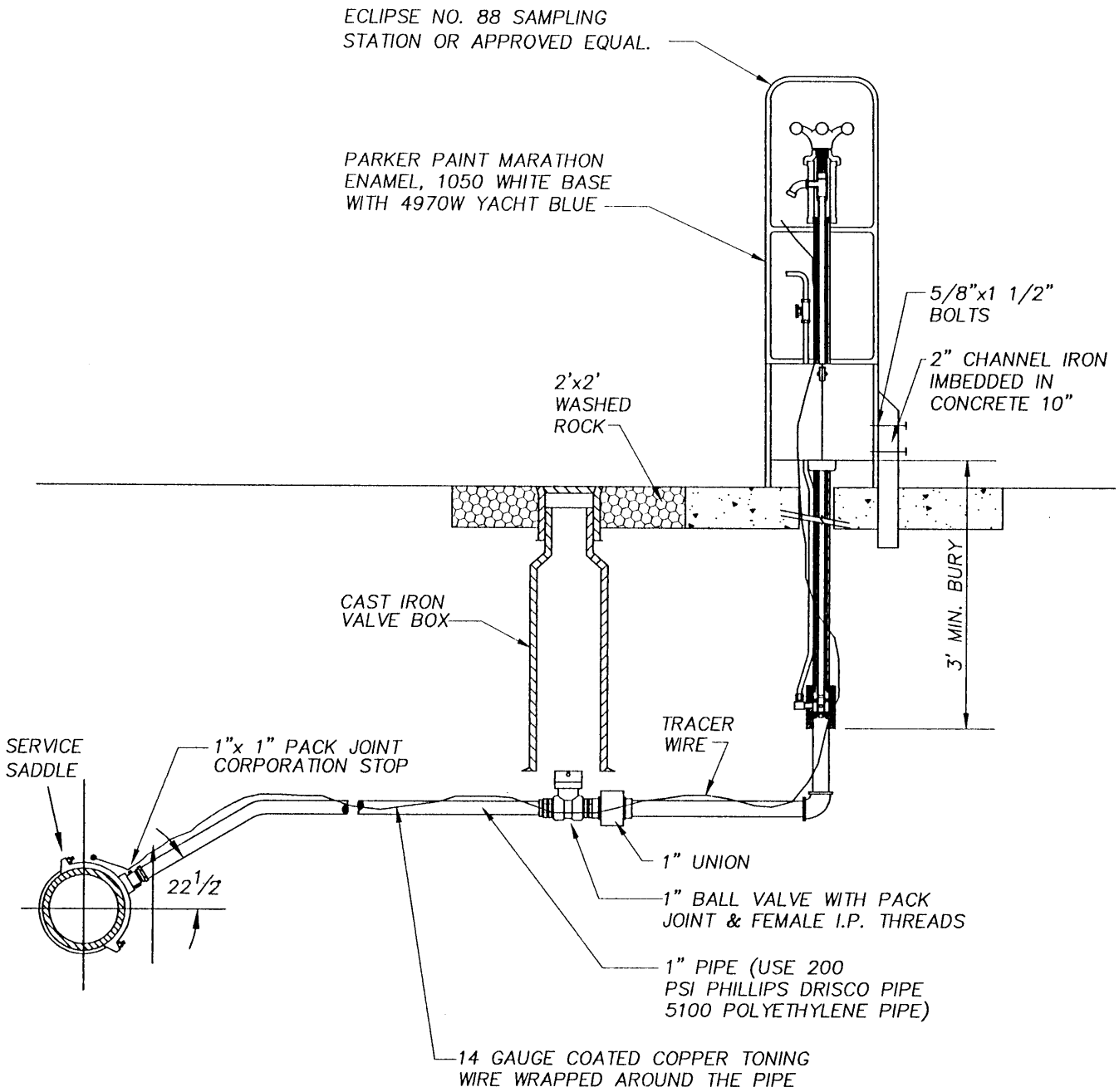

NOTES:

1. STAINLESS STEEL INSERTS REQUIRED FOR ALL PACK JOINTS.
2. ALL SERVICE SADDLES SHALL HAVE RUBBER GASKET AND I.P. THREADS.
3. SEE DIRECTOR OF PUBLIC WORKS FOR USE OF SAMPLING TYPE CR018AW OR CR018BW.

APPROVED BY	REVISED DATE	CITY OF CASTLE ROCK	STD. PLAN NO.
CITY ENGINEER	07/15/97	SAMPLING STATION (TYPICAL FOR SIDEWALK INSTALLATION)	CR018BW

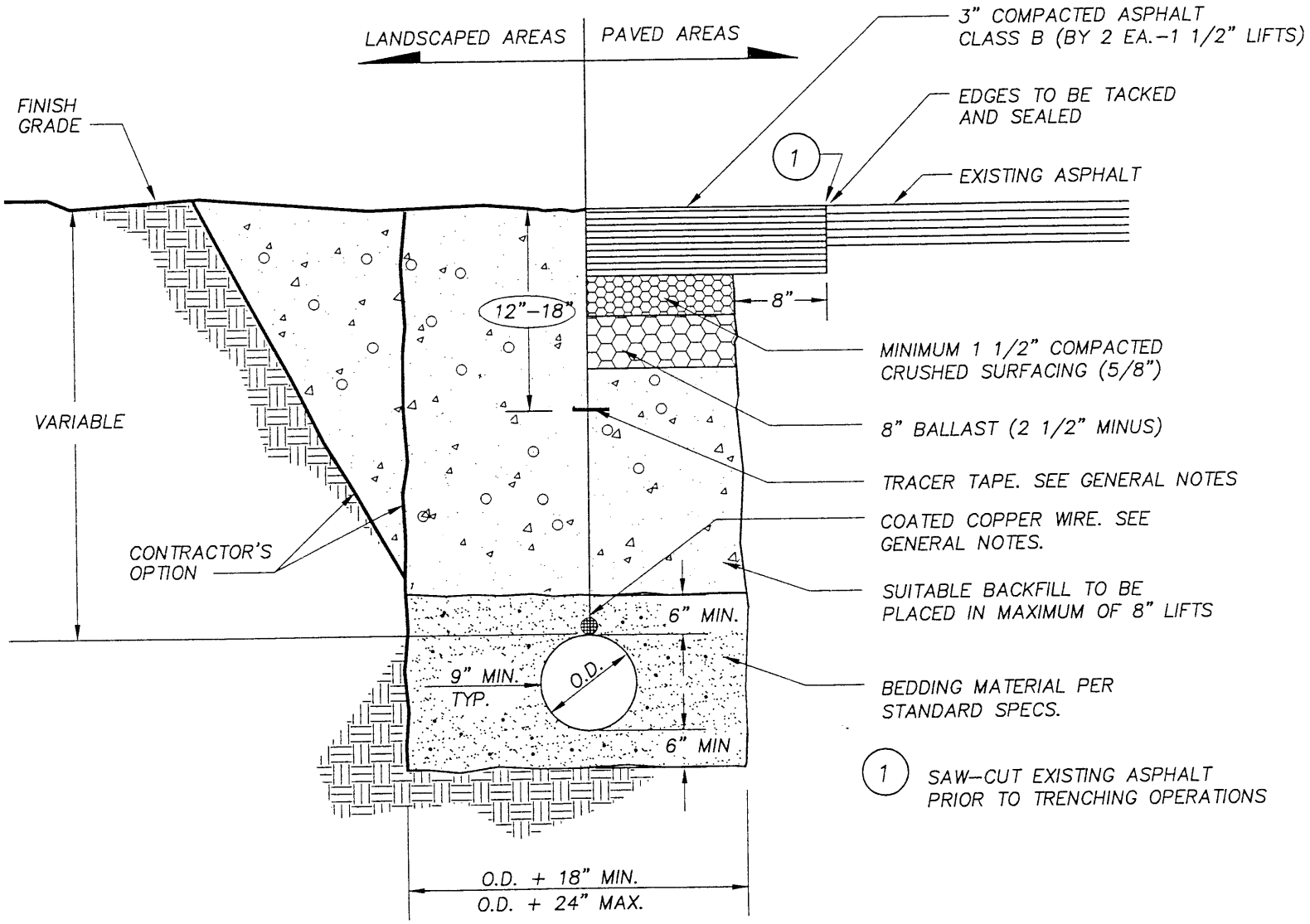

APPROVED BY	REVISED DATE	CITY OF CASTLE ROCK	STD. PLAN NO.
CITY ENGINEER	07/15/97	WATERMAIN BEDDING/ ASPHALT RESTORATION DETAIL	CR019W