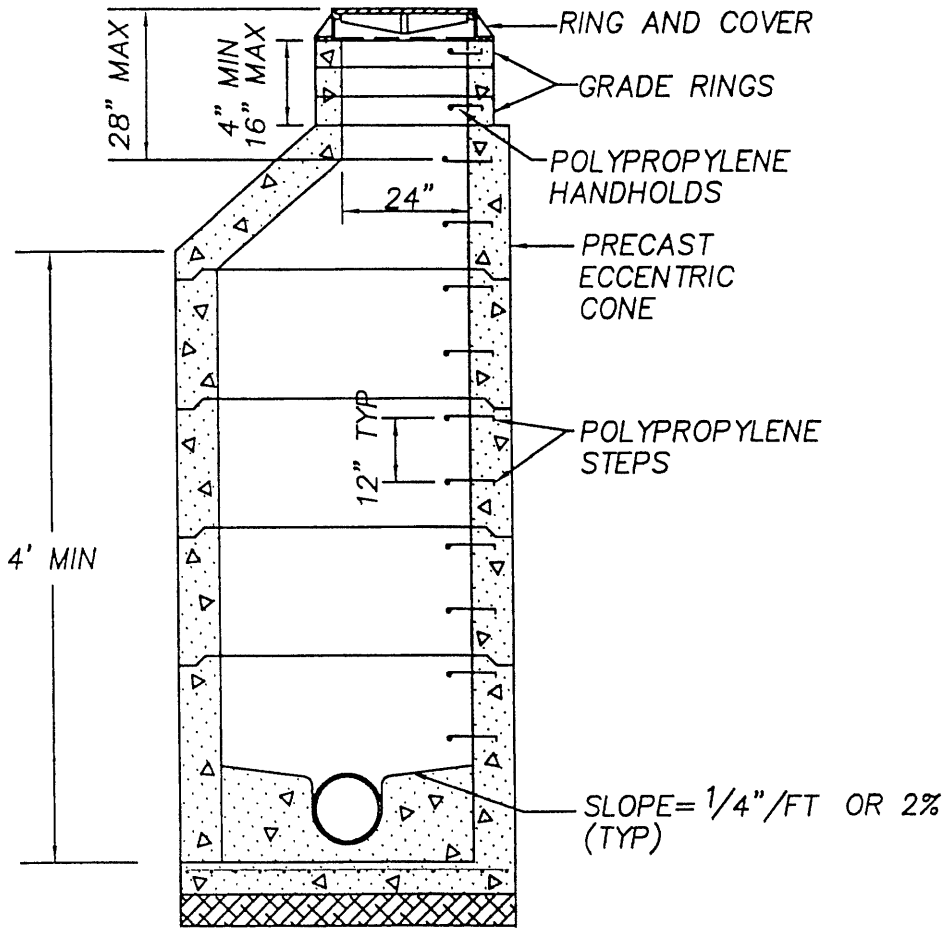

GENERAL NOTES:

THIS DETAIL OUTLINES THE CITY OF CASTLE ROCK MODIFICATIONS TO THE WSDOT TYPE 1 48 INCH, 50 INCH, AND 60 INCH MANHOLE.

NOTES:

1. PRECAST MANHOLES SHALL MEET THE REQUIREMENTS OF ASTM C478. JOINTS SHALL BE RUBBER GASKETED, CONFORMING TO ASTM C443 AND SHALL BE GROUTED FROM THE INSIDE. LIFT HOLES SHALL BE GROUTED FROM THE OUTSIDE AND THE INSIDE OF THE MANHOLE.

2. THE FIRST STEP OR HANDHOLD SHALL BE A MAXIMUM OF 12" FROM THE TOP OF THE COVER.

3. CONNECTION TO MANHOLE SHALL BE MADE BY KOR-N-SEAL FITTING ONLY. KOR-N-SEAL SHALL BE INSTALLED ACCORDING TO MANUFACTURER'S SPECIFICATIONS. KNOCKOUTS WILL NOT BE ALLOWED.

4. SEE STANDARD PLAN CR003SS FOR MANHOLE COLLAR INSTALLATION.

5. A "SEWER GUARD" SHALL BE INSTALLED IN ANY MANHOLE SUBJECT TO FLOODING.

APPROVED BY	REVISED DATE	CITY OF CASTLE ROCK	STD. PLAN NO.
CITY ENGINEER	8/24/01	TYPE 1 MANHOLE	CR001SS

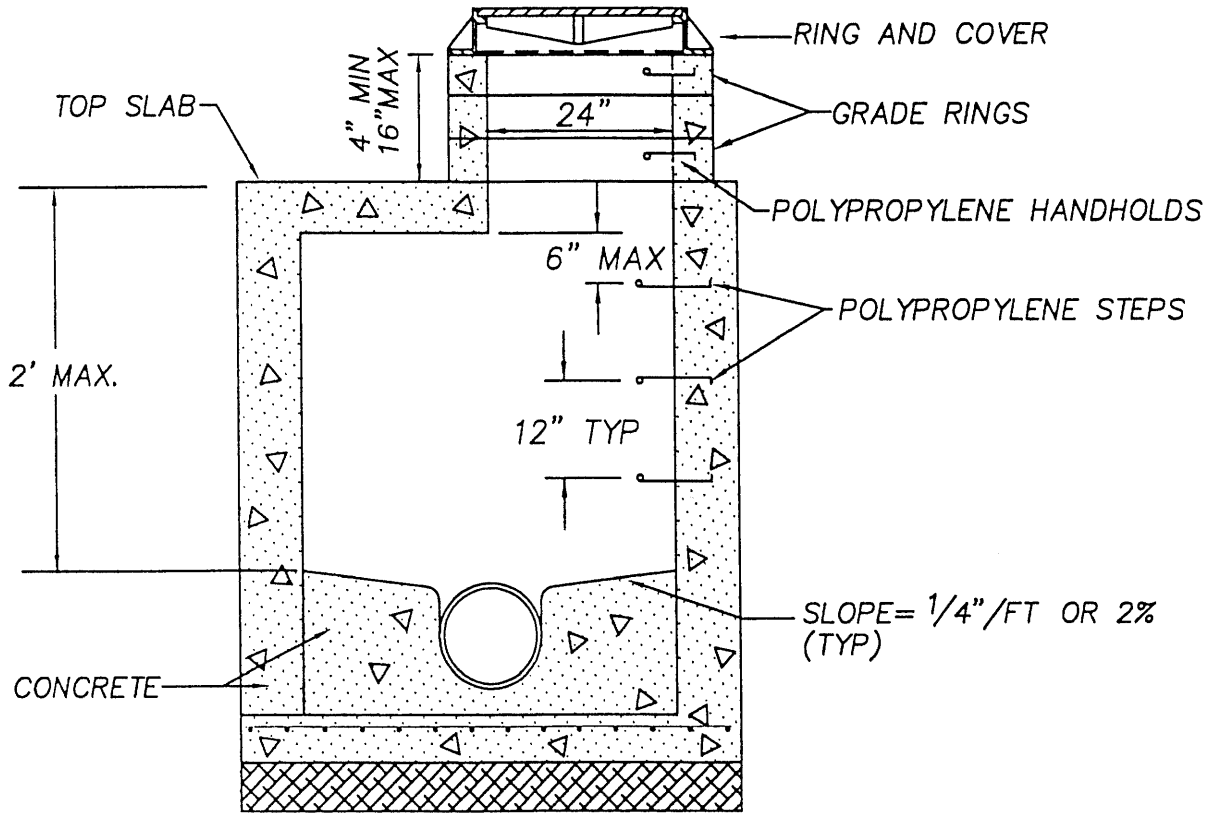

GENERAL NOTES:

THIS DETAIL OUTLINES THE CITY OF CASTLE ROCK MODIFICATIONS TO THE WSDOT TYPE 3 MANHOLE FOR SHALLOW INSTALLATIONS.

NOTES:

1. PRECAST MANHOLES SHALL MEET THE REQUIREMENTS OF ASTM C478. JOINTS SHALL BE RUBBER GASKETED CONFORMING TO ASTM C443 AND SHALL BE GROUTED FROM THE INSIDE. LIFT HOLES SHALL BE GROUTED FROM THE OUTSIDE AND INSIDE OF THE MANHOLE.

2. THE FIRST STEP OR HANDHOLD SHALL BE A MAXIMUM OF 12" FROM THE TOP OF THE COVER.

3. CONNECTION TO MANHOLE SHALL BE MADE BY KOR-N-SEAL FITTING ONLY. KOR-N-SEAL SHALL BE INSTALLED ACCORDING TO MANUFACTURER'S SPECIFICATIONS. KNOCKOUTS WILL NOT BE ALLOWED.

4. SEE STANDARD PLAN CR003SS FOR MANHOLE COLLAR INSTALLATION.

5. A "SEWER GUARD" LI D INSERT AS PRODUCED BY PRECO SHALL BE INSTALLED IN ANY MANHOLE SUBJECT TO SURFACE FLOODING.

APPROVED BY	REVISED DATE	CITY OF CASTLE ROCK	STD. PLAN NO.
CITY ENGINEER	8/24/01	SHALLOW MANHOLE	CR002SS

MANHOLE IN ASPHALT

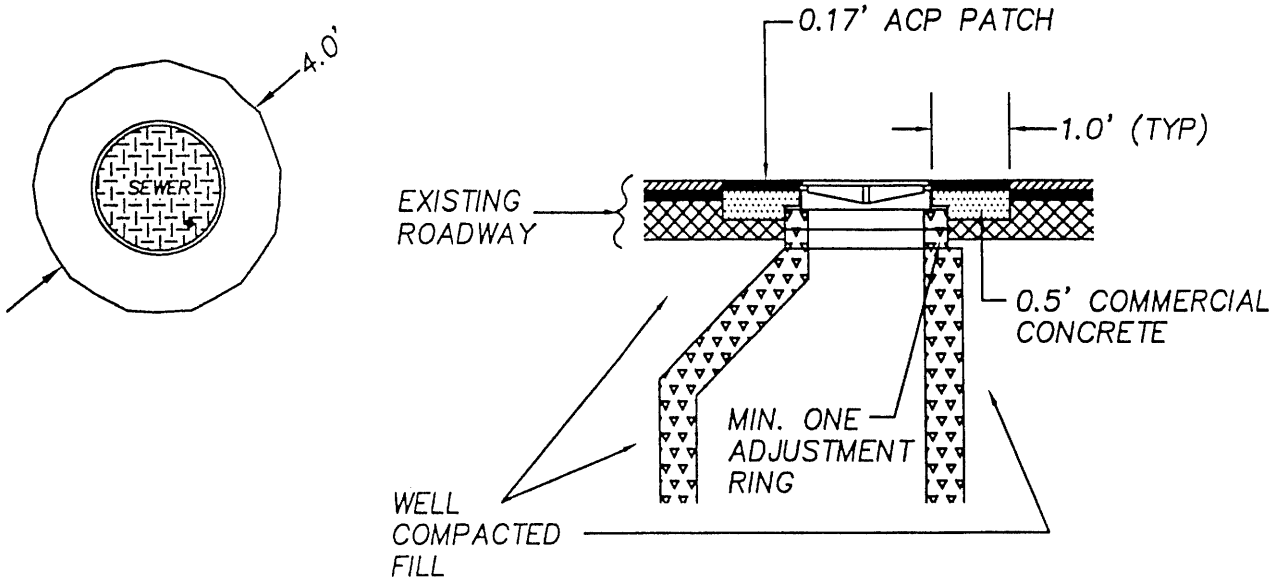

MANHOLE OUTSIDE ASPHALT

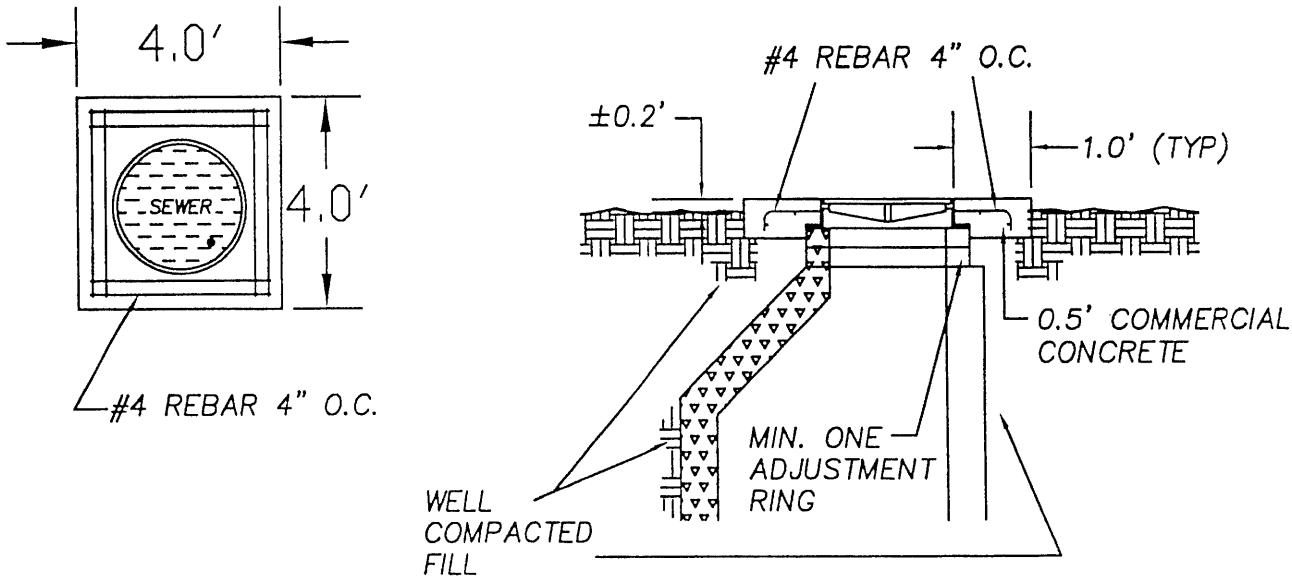

NOTE:

1. ON MANHOLE OUTSIDE ASPHALT ADD REINFORCING STEEL AS SHOWN ABOVE. DEFORMED BAR TO MEET ASTM A615 GRADE 60 FY=60,000 P.S.I.
2. OPENING IN LID FOR MANHOLE HOOK IS REQUIRED.

APPROVED BY	REVISED DATE	CITY OF CASTLE ROCK	STD. PLAN NO.
CITY ENGINEER	8/24/01	MANHOLE COLLAR	CR003SS

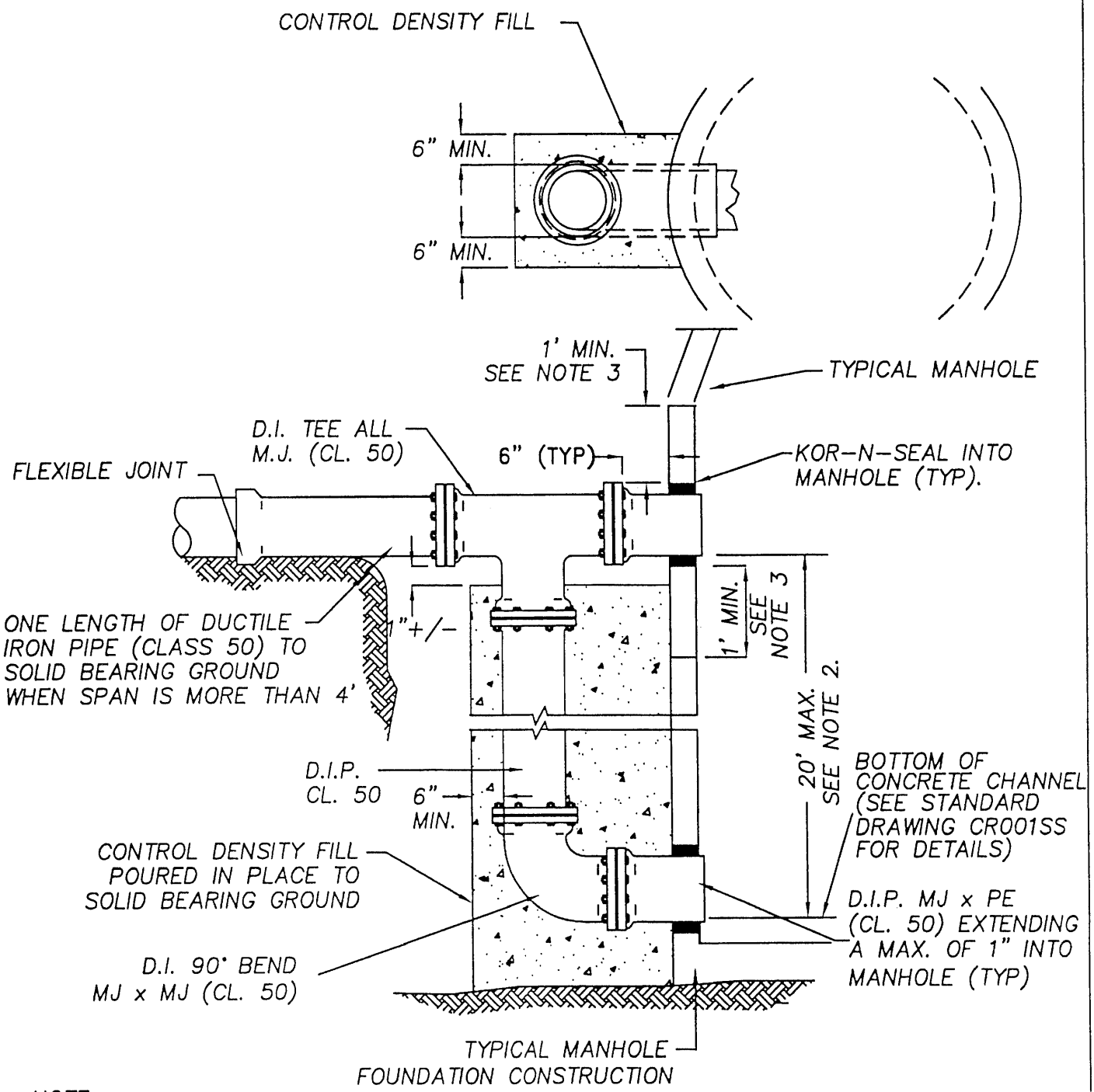

NOTE:

1. THE INTERIOR OF ALL DUCTILE IRON SHALL BE COATED WITH EPOXY OR MANUFACTURER'S STANDARD WASTEWATER RESILIENT COATING.
2. DEPTHS OVER 20' MAY BE ALLOWED IF MEGA-LUG JOINTS ARE USED.
3. MAINTAIN A MINIMUM OF 1' BETWEEN MANHOLE JOINTS AND TEE.

APPROVED BY	REVISED DATE	CITY OF CASTLE ROCK	STD. PLAN NO.
CITY ENGINEER	8/24/01	OUTSIDE DROP CONNECTION	CR004SS

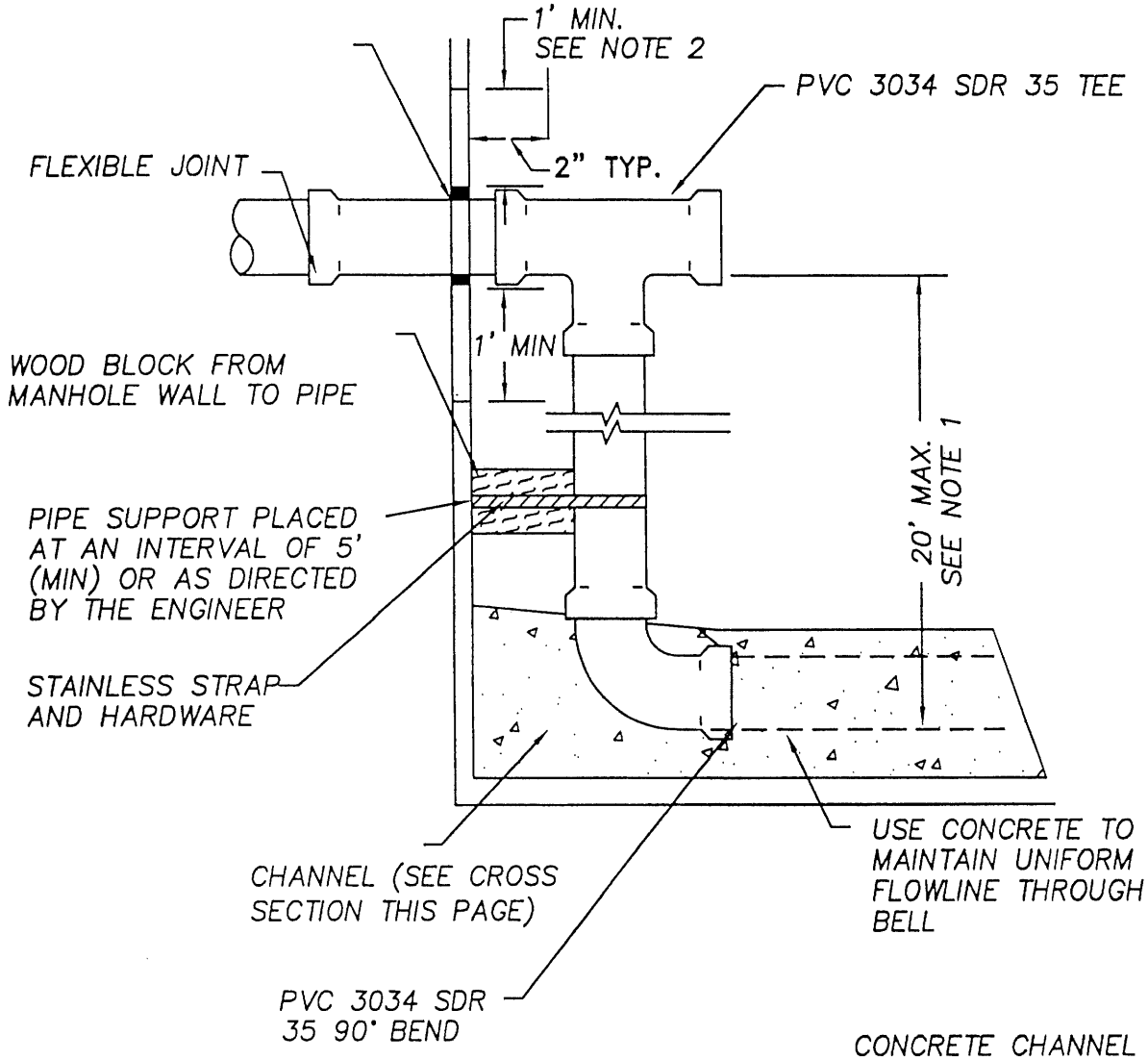

CONCRETE CHANNEL

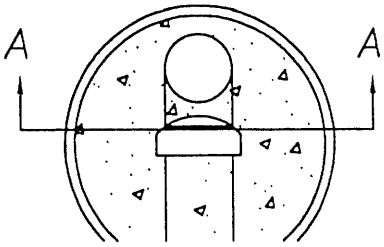

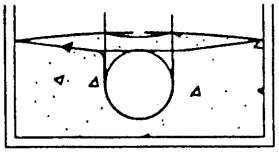

SECTION A–A

NOTE:

1. DEPTHS OVER 20' MAY BE ALLOWED WHEN PROPER SUPPORT IS PROVIDED, AS APPROVED BY THE CITY ENGINEER.
2. MAINTAIN A MINIMUM SEPARATION OF 1' BETWEEN MANHOLE JOINTS AND PIPE PENETRATIONS.
3. INSIDE DROP IS ONLY ALLOWED WHEN APPROVED BY THE CITY ENGINEER.

APPROVED BY	REVISED DATE	CITY OF CASTLE ROCK	STD. PLAN NO.
CITY ENGINEER	8/24/01	INSIDE DROP CONNECTION	CR005SS

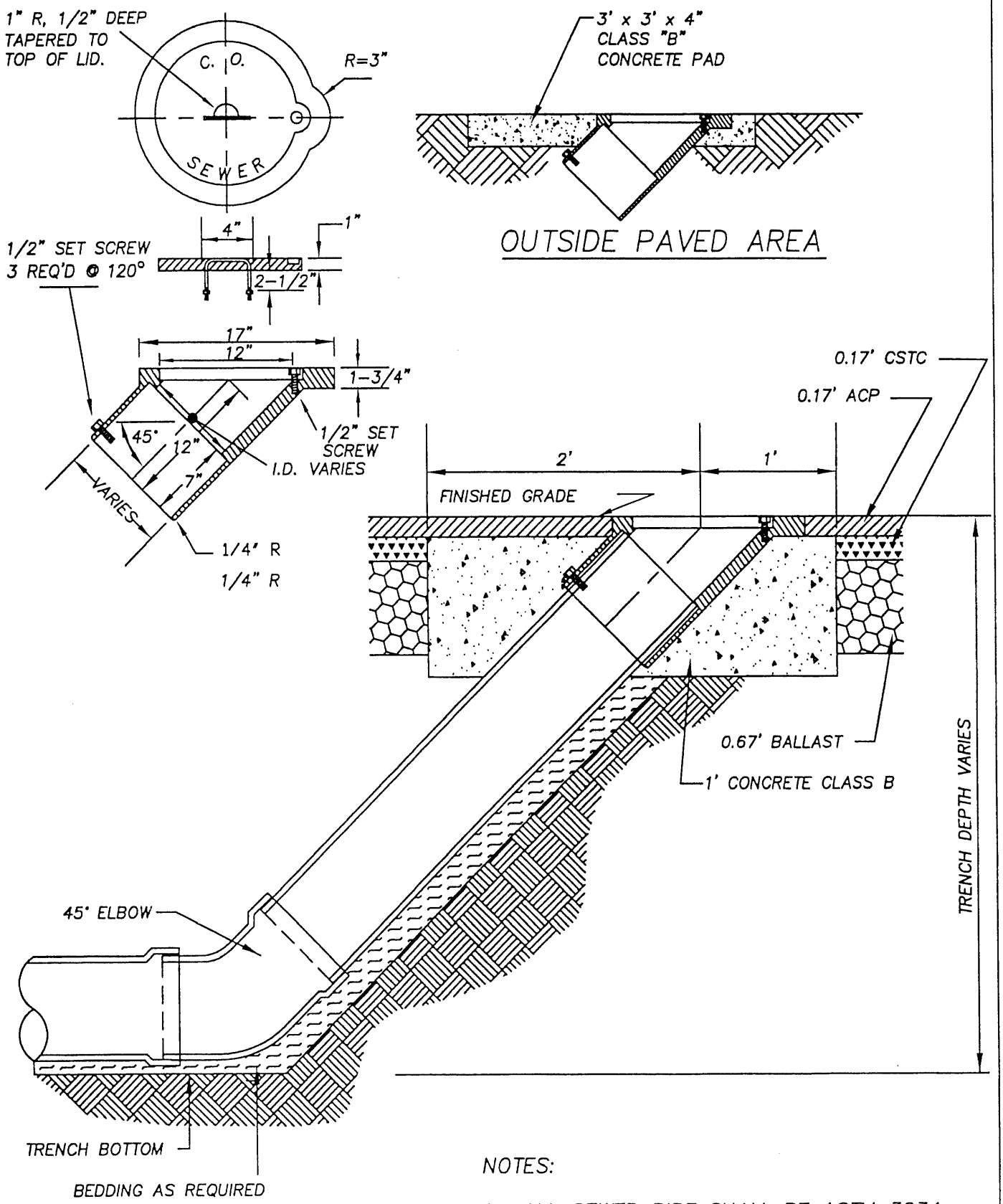

NOTES:

1. ALL SEWER PIPE SHALL BE ASTM 3034 SDR 35.
2. CLEANOUTS SHALL NOT BE INSTALLED ON SEWER MAINS LARGER THAN 8" DIAMETER.

APPROVED BY	REVISED DATE	CITY OF CASTLE ROCK	STD. PLAN NO.
CITY ENGINEER	11/30/01	CLEANOUT	CR006SS

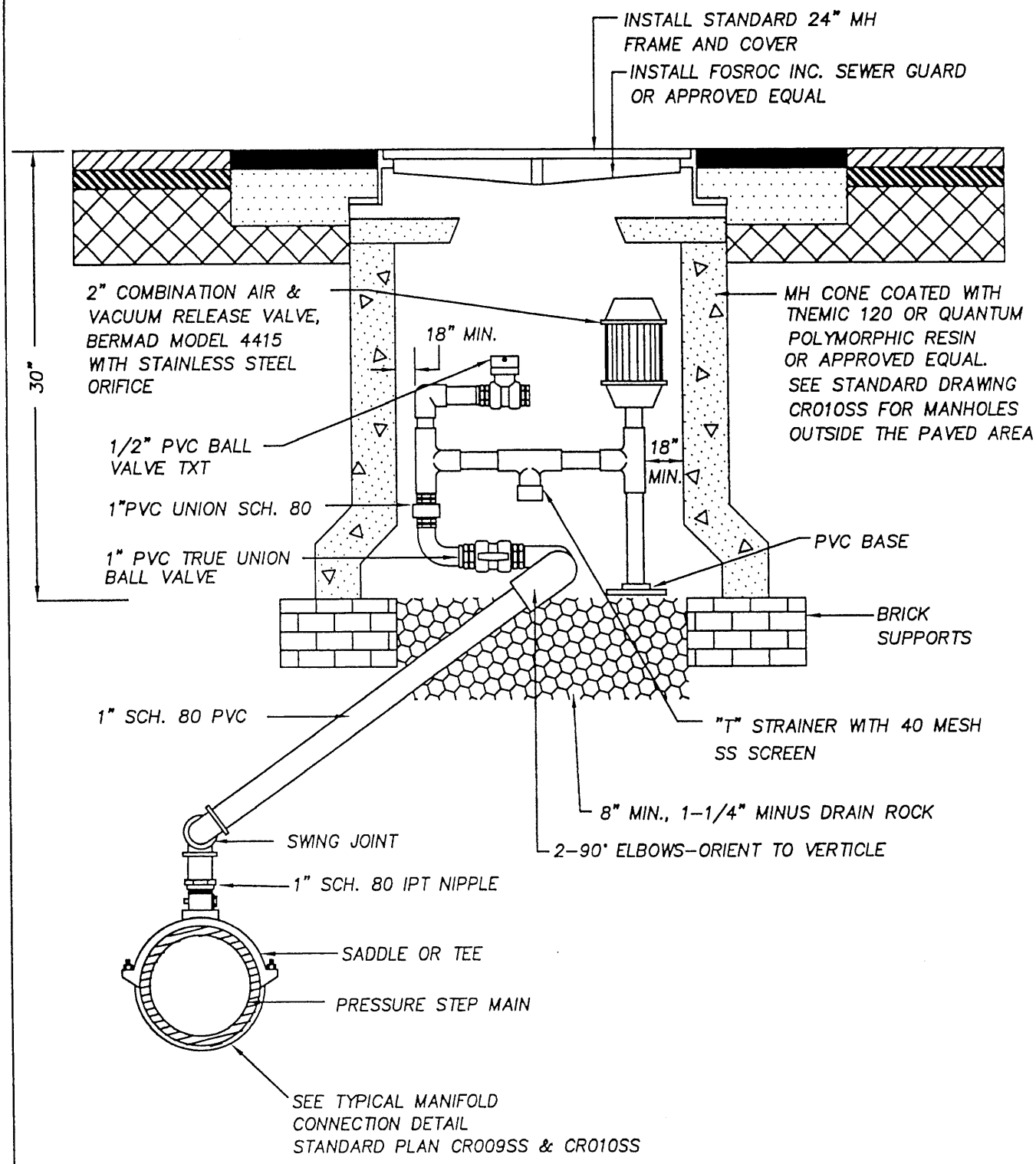

NOTE:

1. LOCATE AIR RELEASE ASSEMBLY IN SIDEWALK WHEN POSSIBLE.
2. SEE ALSO STANDARD DRAWINGS CR009SS & CR010SS

APPROVED BY	REVISED DATE	CITY OF CASTLE ROCK	STD. PLAN NO.
CITY ENGINEER	8/24/01	SEWER AIR RELEASE ASSEMBLY	CR008SS

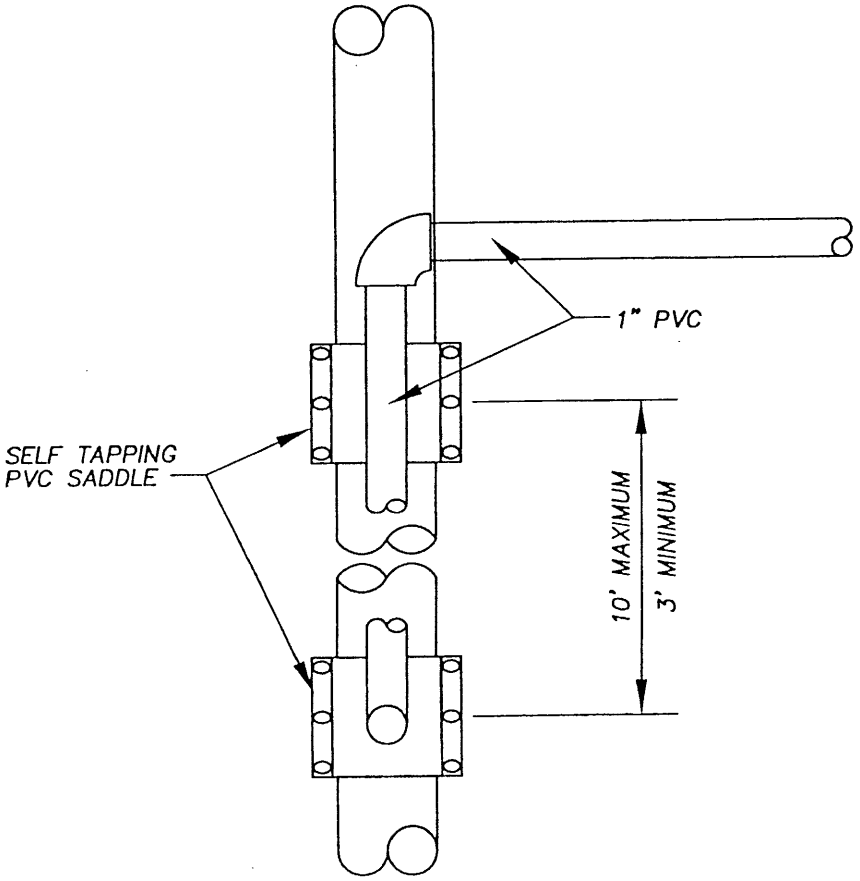

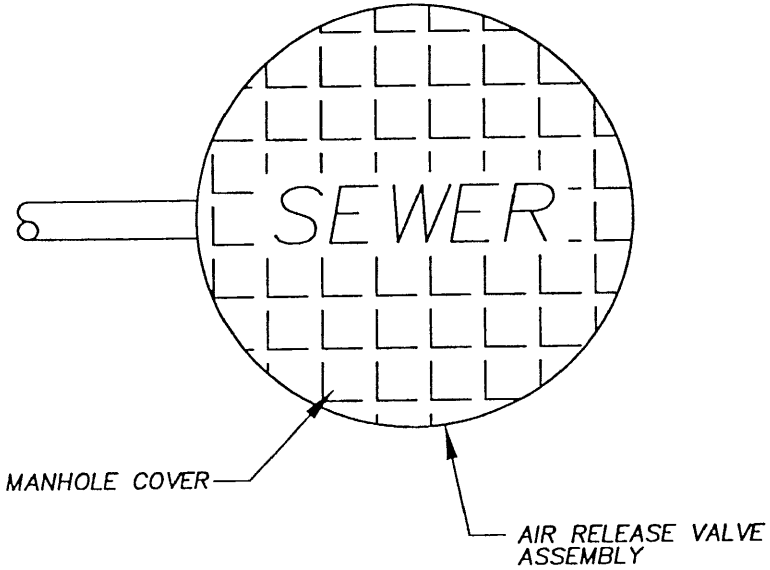

NOTE:

1. SEE ALSO STANDARD DRAWINGS CR008SS & CR010SS

APPROVED BY	REVISED DATE	CITY OF CASTLE ROCK	STD. PLAN NO.
	8/24/01	SEWER MANIFOLD CONNECTION PLAN DETAIL	CR009SS
CITY ENGINEER			

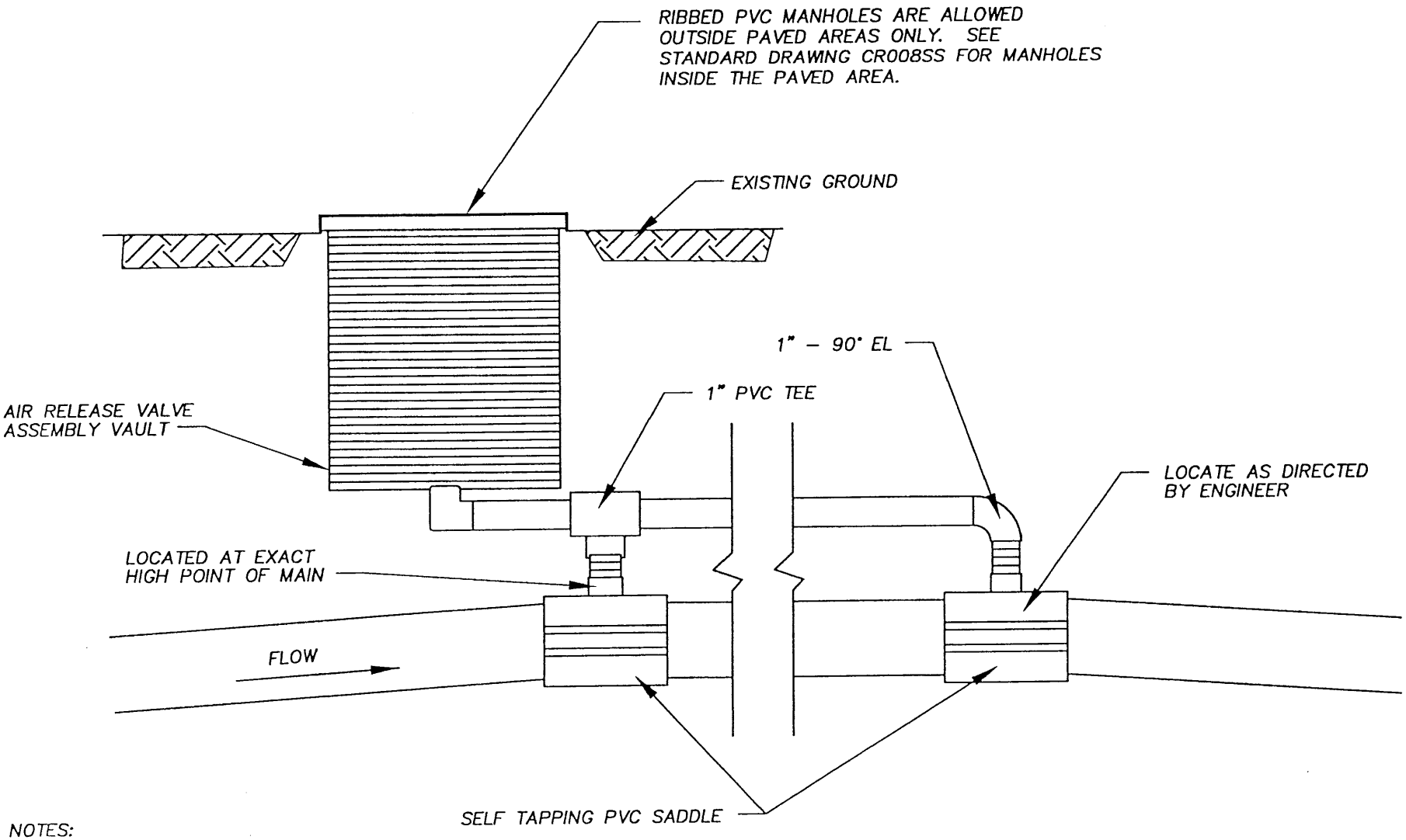

NOTES:

1. SEE ALSO STANDARD DRAWINGS CR008SS AND CR009SS
2. PROVIDE 18" (MIN) CLEARANCE BETWEEN ALL AIR RELEASE PIPING AND MANHOLE WALL.

PROFILE

APPROVED BY	REVISED DATE	CITY OF CASTLE ROCK	STD. PLAN NO
CITY ENGINEER	8/24/01	SEWER MANIFOLD CONNECTION SECTION DETAIL	CR010SS

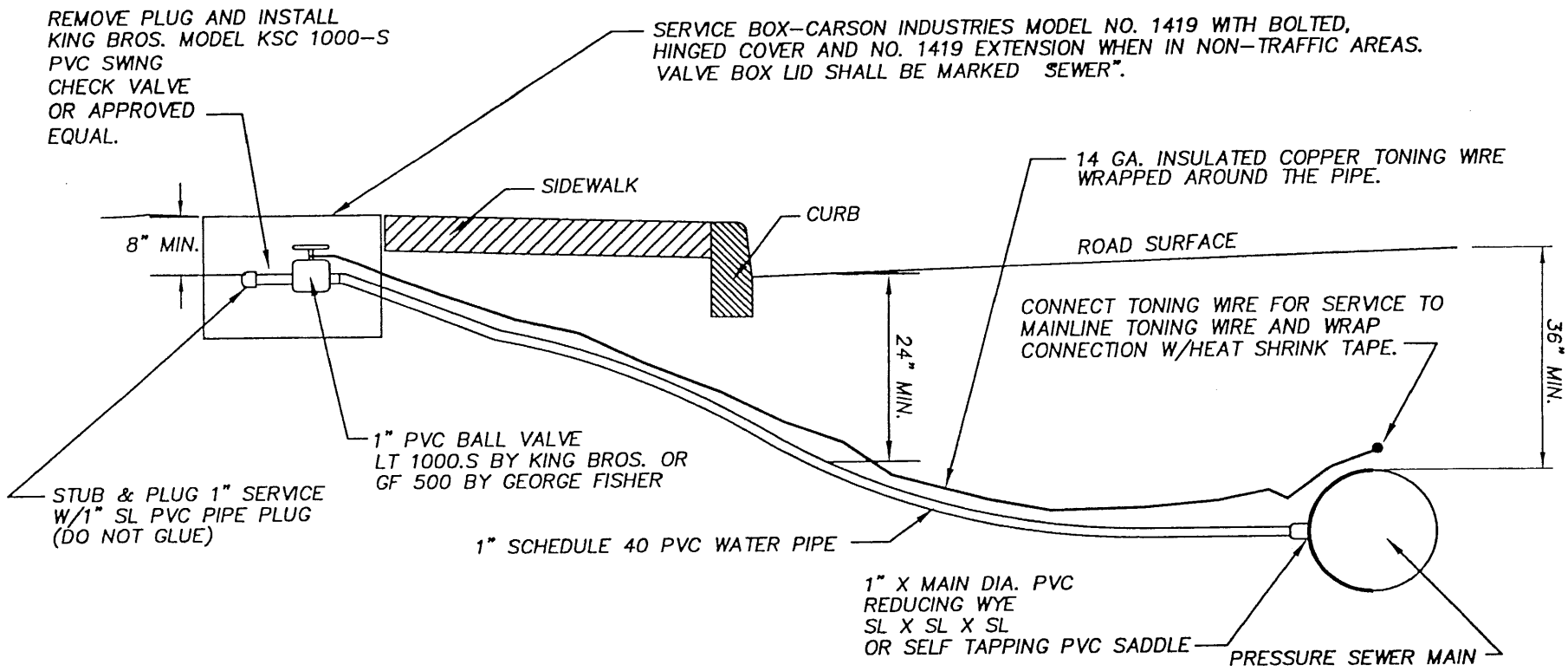

DOUBLE SERVICE CONFIGURATION

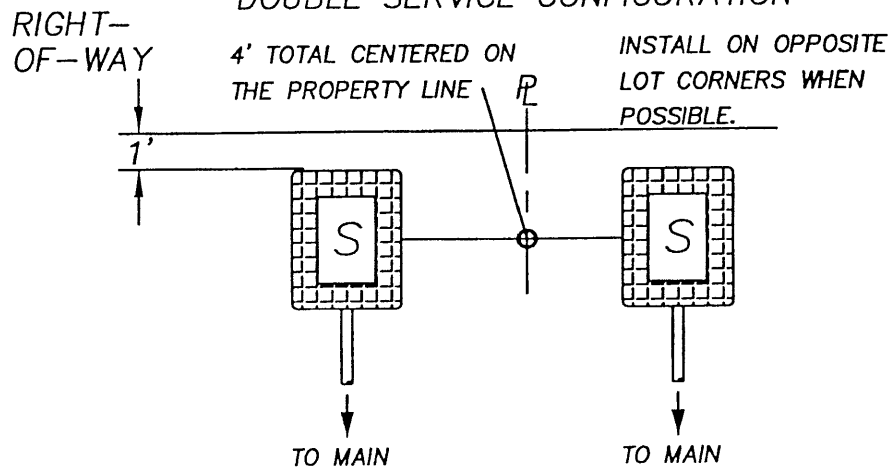

NOTE:

IF LIVE TAP IS REQUIRED, THE CONTRACTOR SHALL EXPOSE THE EXISTING STEP SEWER MAIN. THE CITY WILL FURNISH AND INSTALL TAPPING SLEEVE AND 1" BALL VALVE. THE VALVES AT THE SERVICE BOX MUST BE INSTALLED PRIOR TO THIS OPERATION.

APPROVED BY	CITY ENGINEER
REVISED DATE	8/24/01
CITY OF CASTLE ROCK	TYPICAL PRESSURE SEWER SYSTEM SERVICE CONNECTION
STD. PLAN NO.	CR011SS

NOTES:

1. THE GATE VALVES SHALL BE RESTRAINED TO VAULT TO PREVENT MOVEMENT DUE TO THRUST FORCE.
2. ALL DUCTILE IRON PIPE AND FITTINGS SHALL BE EPOXY COATED.

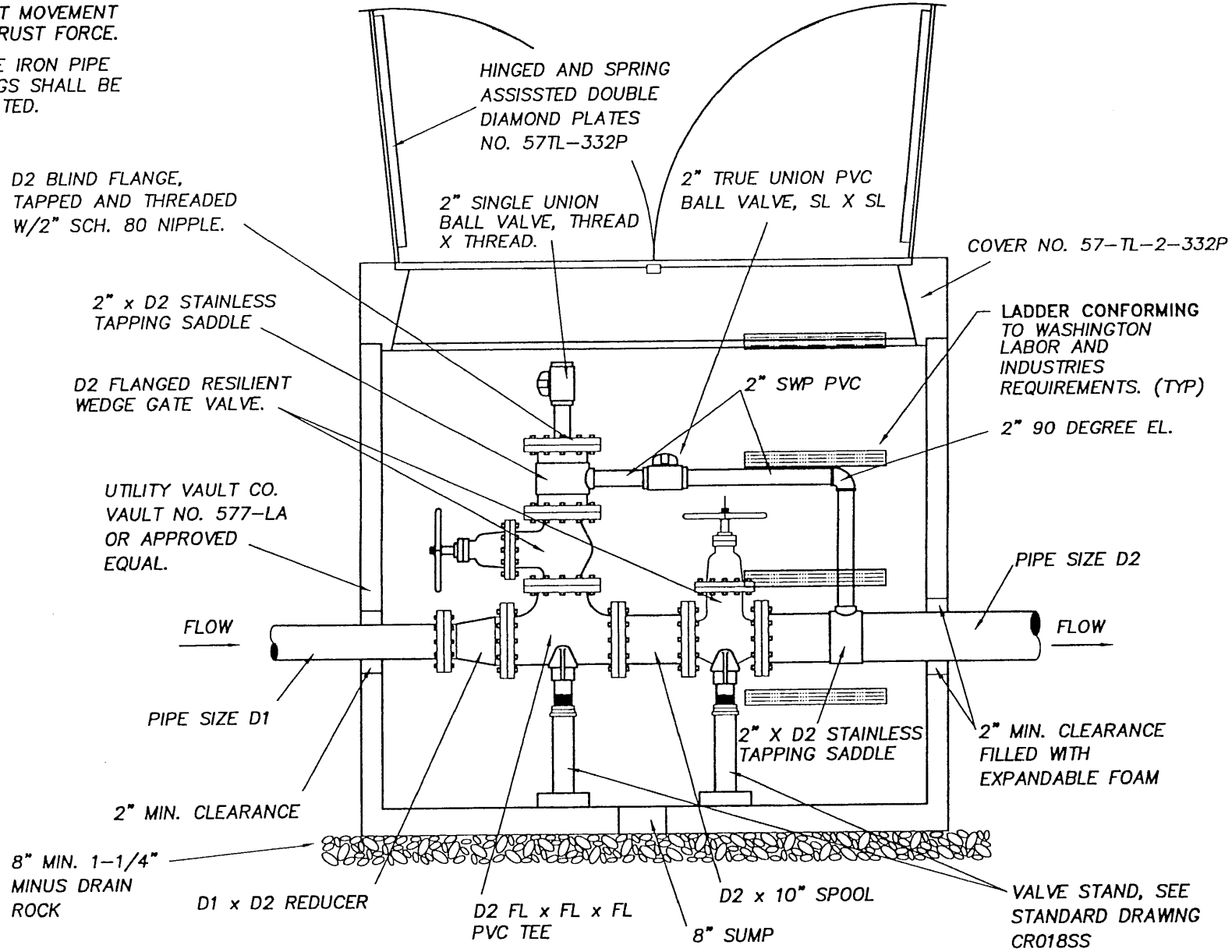

CITY ENGINEER	
APPROVED BY	
REVISED DATE	8/24/01
CITY OF CASTLE ROCK	PIGG PORT CROSS SECTION
STD. PLAN NO.	CR012SS

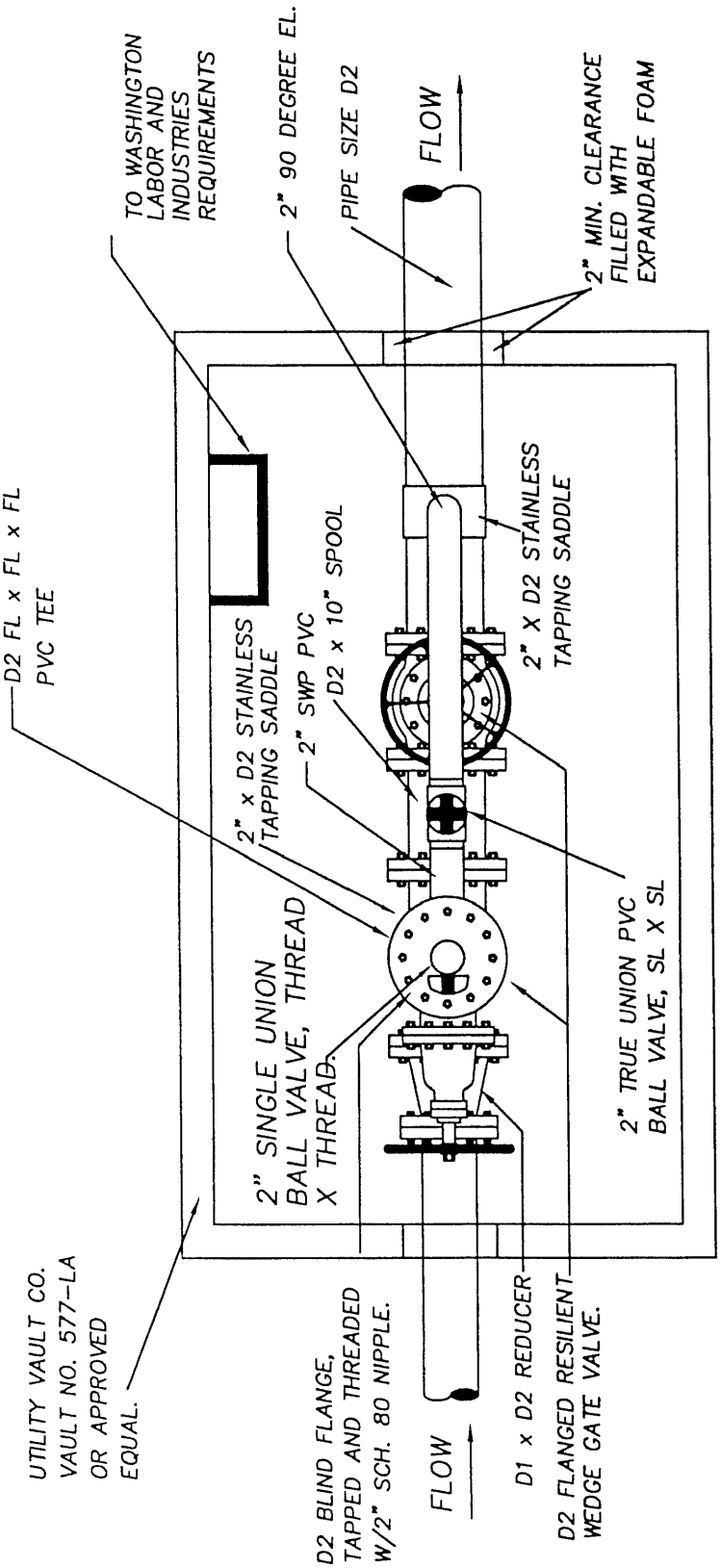

APPROVED BY	REVISED DATE	CITY OF CASTLE ROCK	STD. PLAN NO.
CITY ENGINEER	8/24/01	PIGG PORT PLAN VIEW	CR013SS

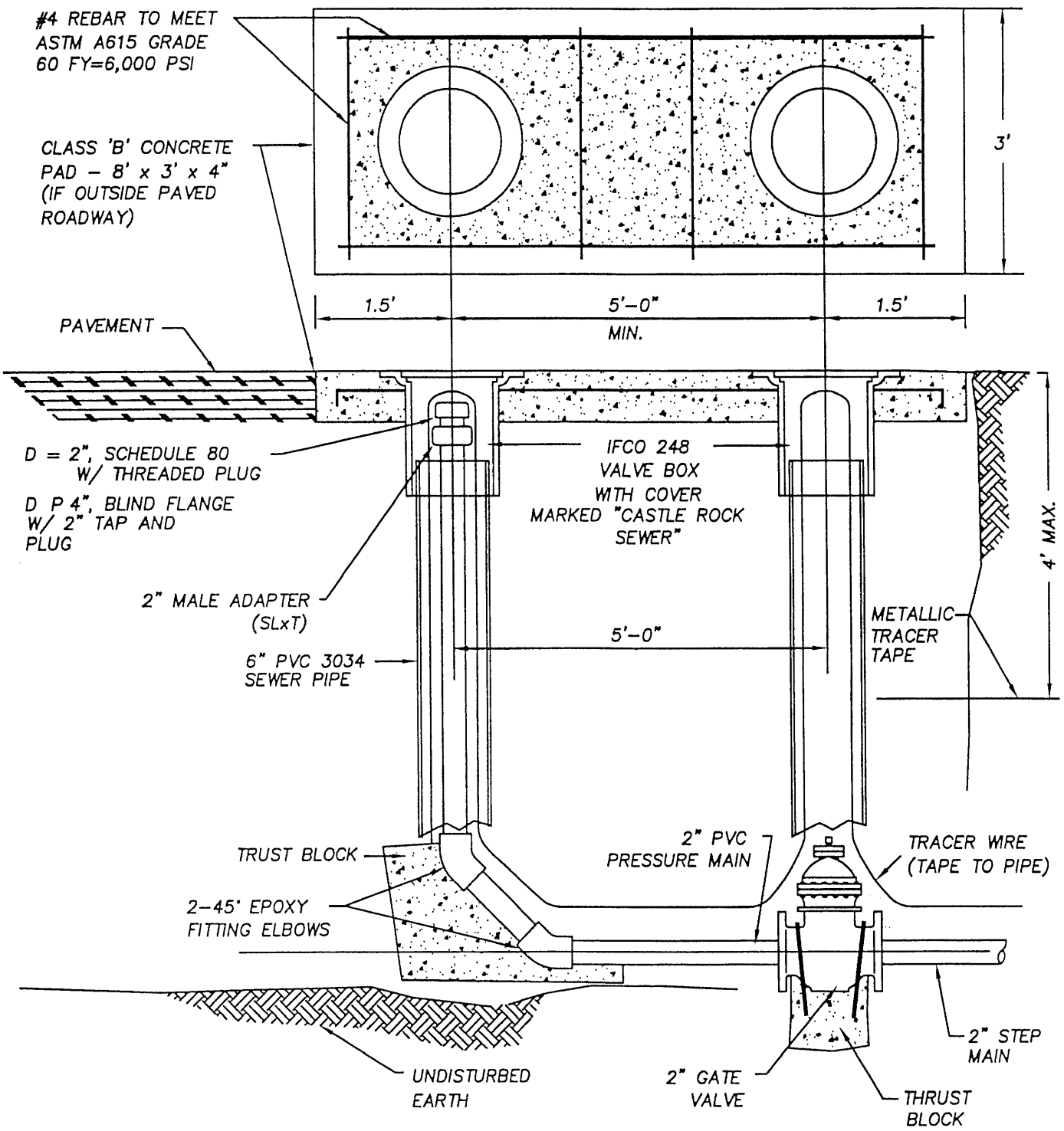

NOTES

1. A PIG PORT DETAIL SHALL BE SUBMITTED TO THE CITY FOR APPROVAL BY THE CITY ENGINEER WHEN USED WITH STEP MAINS LARGER THAN 2".

APPROVED BY	REVISED DATE	CITY OF CASTLE ROCK	STD. PLAN NO.
CITY ENGINEER	8/24/01	TERMINUS PIGG LAUNCH PORT	CR014SS

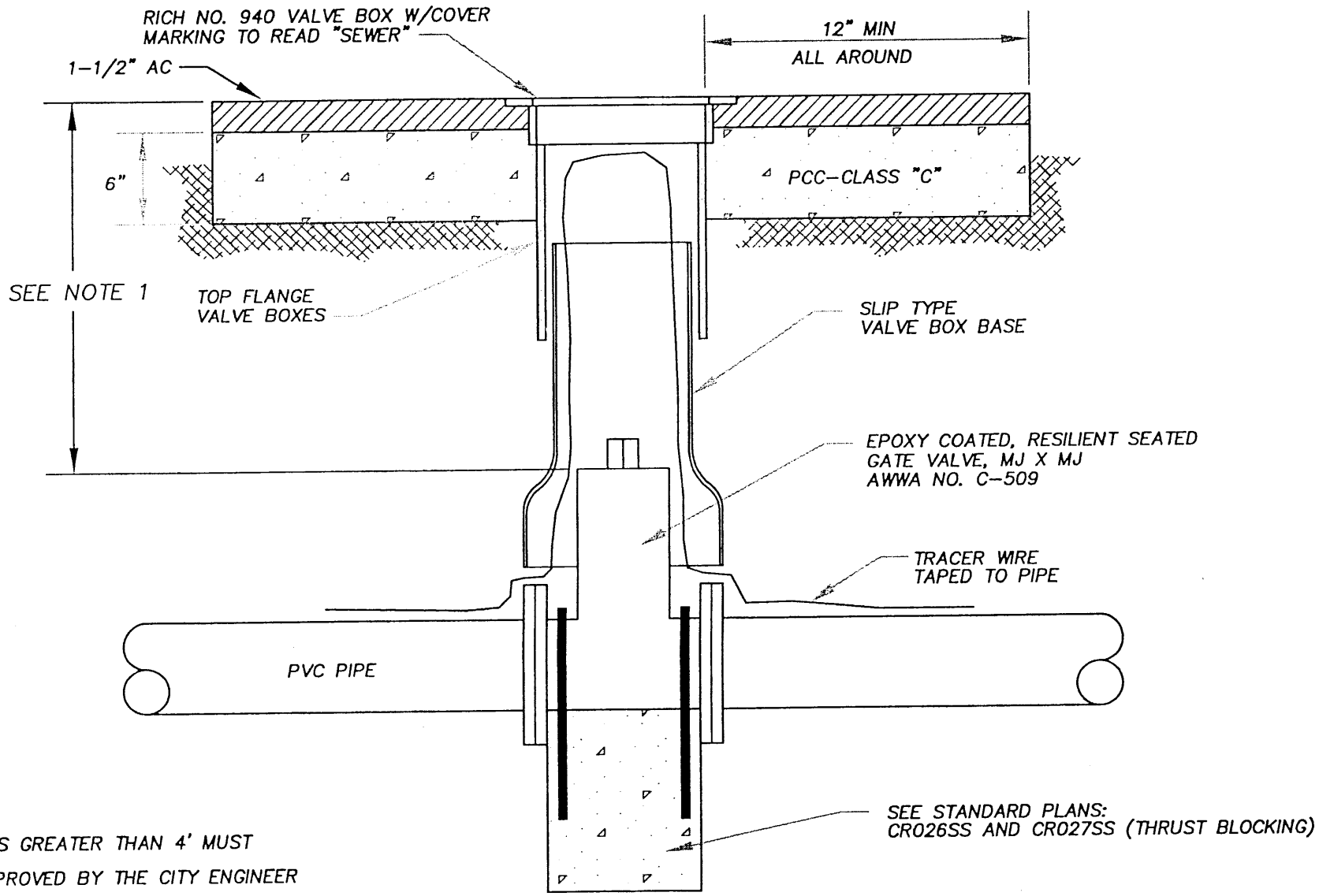

NOTE:

1. DEPTHS GREATER THAN 4' MUST BE APPROVED BY THE CITY ENGINEER

APPROVED BY	REVISED DATE	CITY OF CASTLE ROCK	STD. PLAN NO.
CITY ENGINEER	8/24/01	TYPICAL FORCE MAIN GATE VALVE 2" OR GREATER	CR015SS

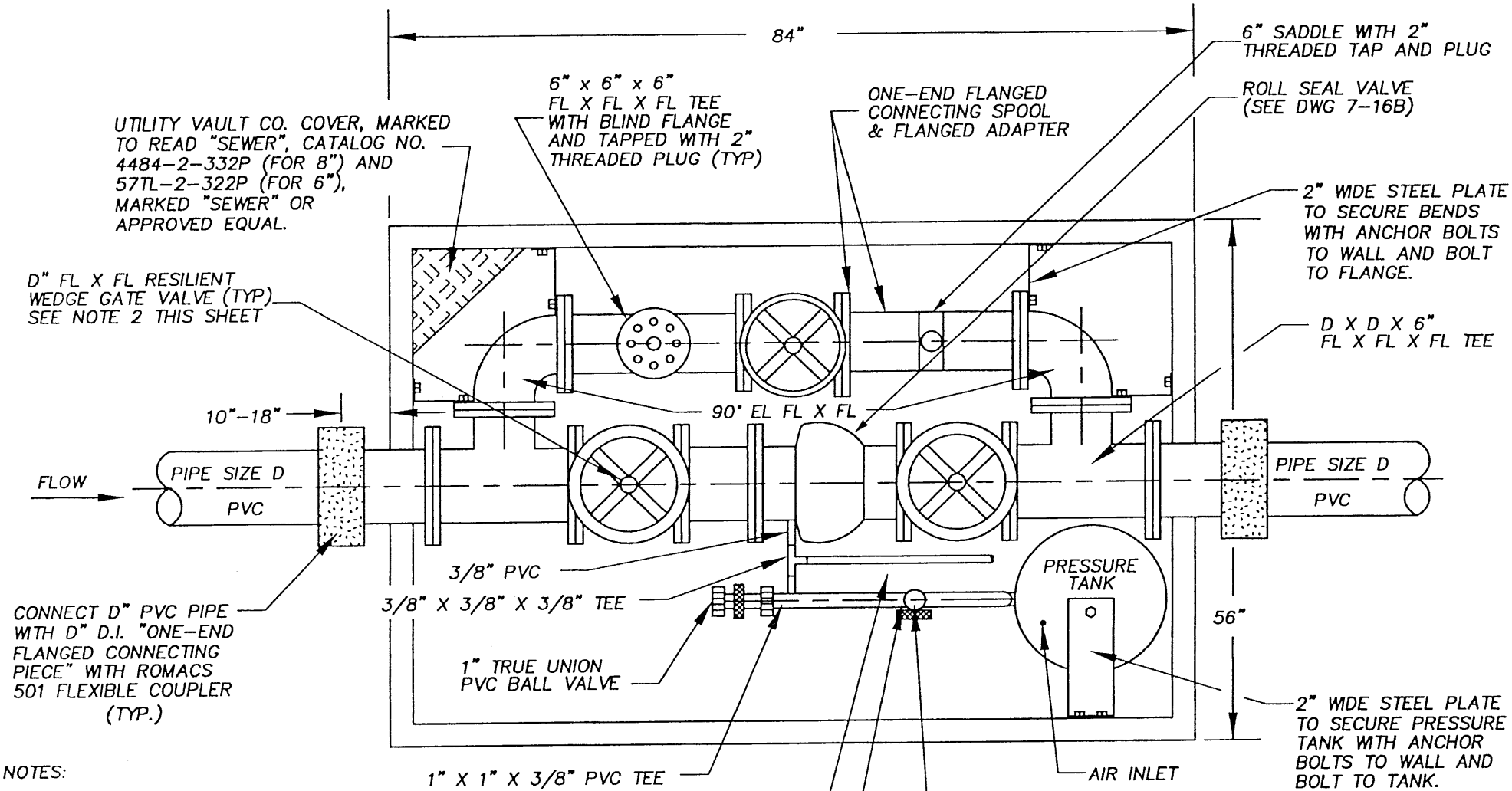

NOTES:

1. ALL PIPES AND FITTINGS SHALL BE EPOXY COATED DUCTILE IRON UNLESS OTHERWISE NOTED.
2. ALL GATE VALVES SHALL BE FLANGED RESILIENT WEDGE EPOXY COATED AWWA NO. C-509.
3. REFER TO STANDARD DRAWING CR017SS FOR SECTION VIEW.
4. 18" MIN. WORKING CLEARANCE AROUND ALL PIPING.

PLAN

PIPE SIZE D
6"
8"

APPROVED BY	REVISED DATE	CITY OF CASTLE ROCK	STD. PLAN NO
CITY ENGINEER	8/24/01	6" AND 8" PRESSURE SUSTAINING DEVICE PLAN VIEW	CR016SS

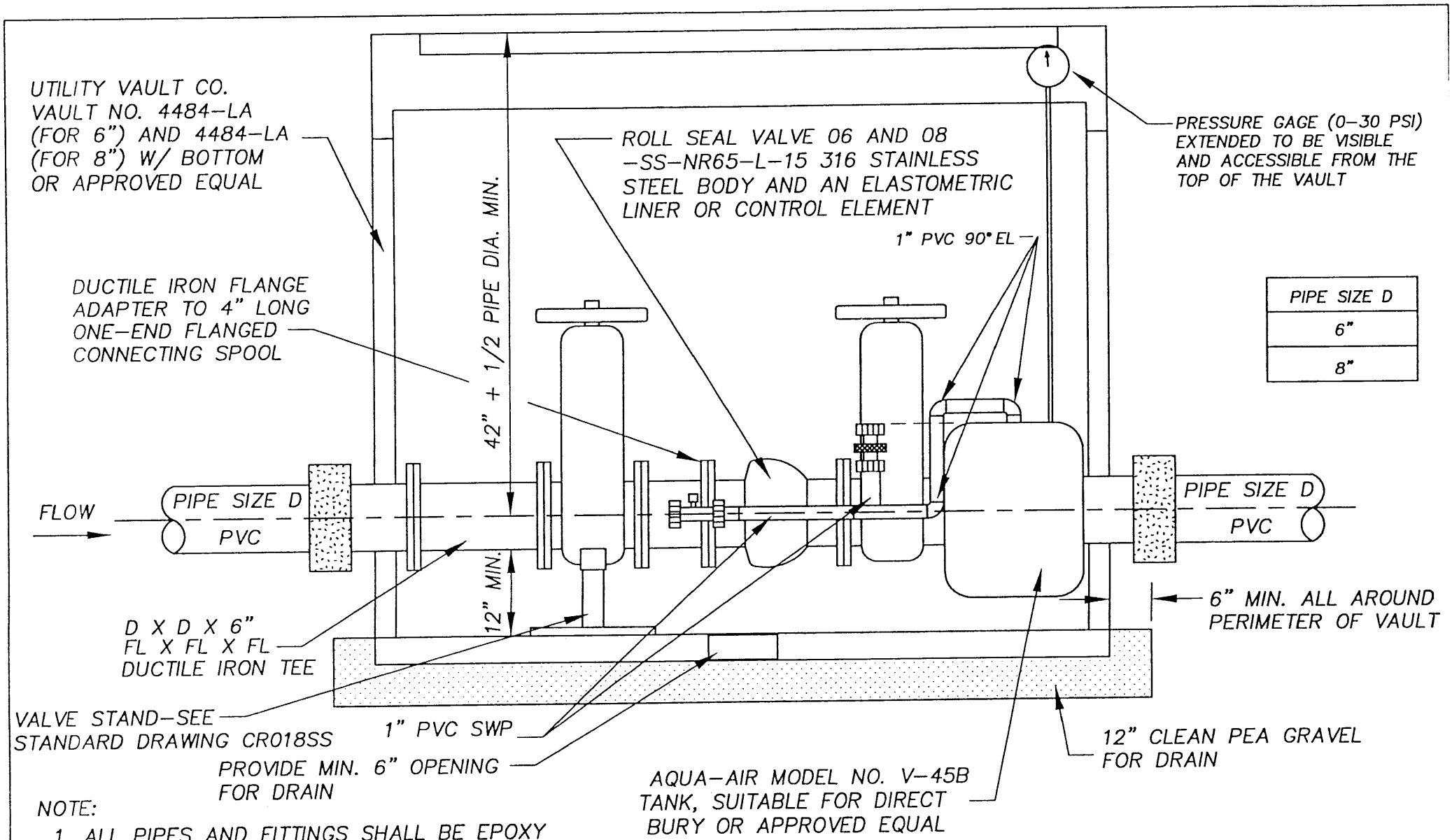

NOTE:

1. ALL PIPES AND FITTINGS SHALL BE EPOXY COATED DUCTILE IRON UNLESS OTHERWISE NOTED.
2. ALL GATE VALVES SHALL BE FLANGED RESILIENT WEDGE EPOXY COATED, AWWA NO. C-509

SECTION

APPROVED BY	REVISED DATE	CITY OF CASTLE ROCK	STD. PLAN NO.
CITY ENGINEER	8/24/01	6" AND 8" PRESSURE SUSTAINING DEVICE SECTION VIEW	CR017SS

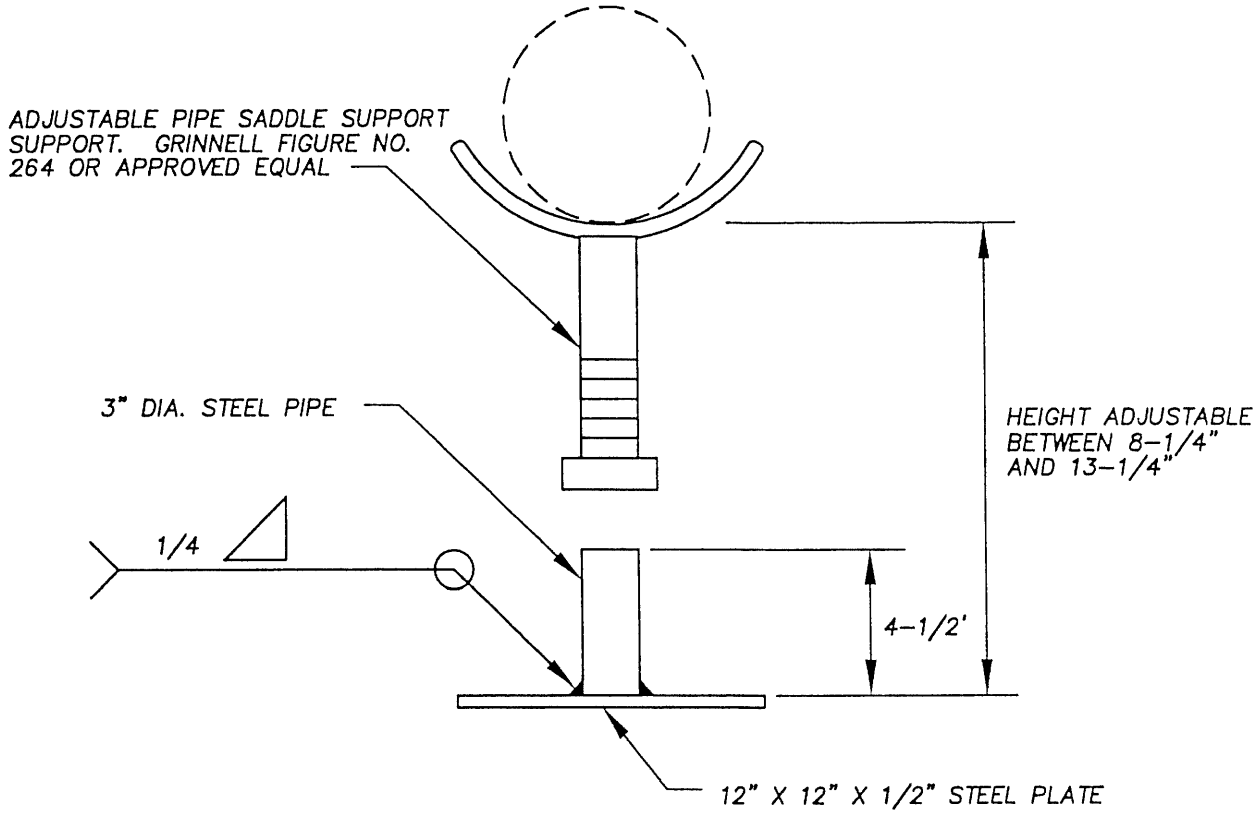

NOTE:

1. AFTER FABRICATION, THE VALVE STAND BASE SHALL BE CLEANED, PRIMERED WITH FULLER O'BRIEN 621-04 BLOX-RUST ALKYD METAL PRIMER OR APPROVED EQUAL AND THEN PAINTED WITH FULLER O'BRIEN 612-XX HEAVY DUTY ALKYD ENAMEL OR APPROVED EQUAL.

APPROVED BY	REVISED DATE	CITY OF CASTLE ROCK	STD. PLAN NO.
CITY ENGINEER	8/24/01	TYPICAL VALVE STAND	CR018SS

GENERAL PANEL LAYOUT

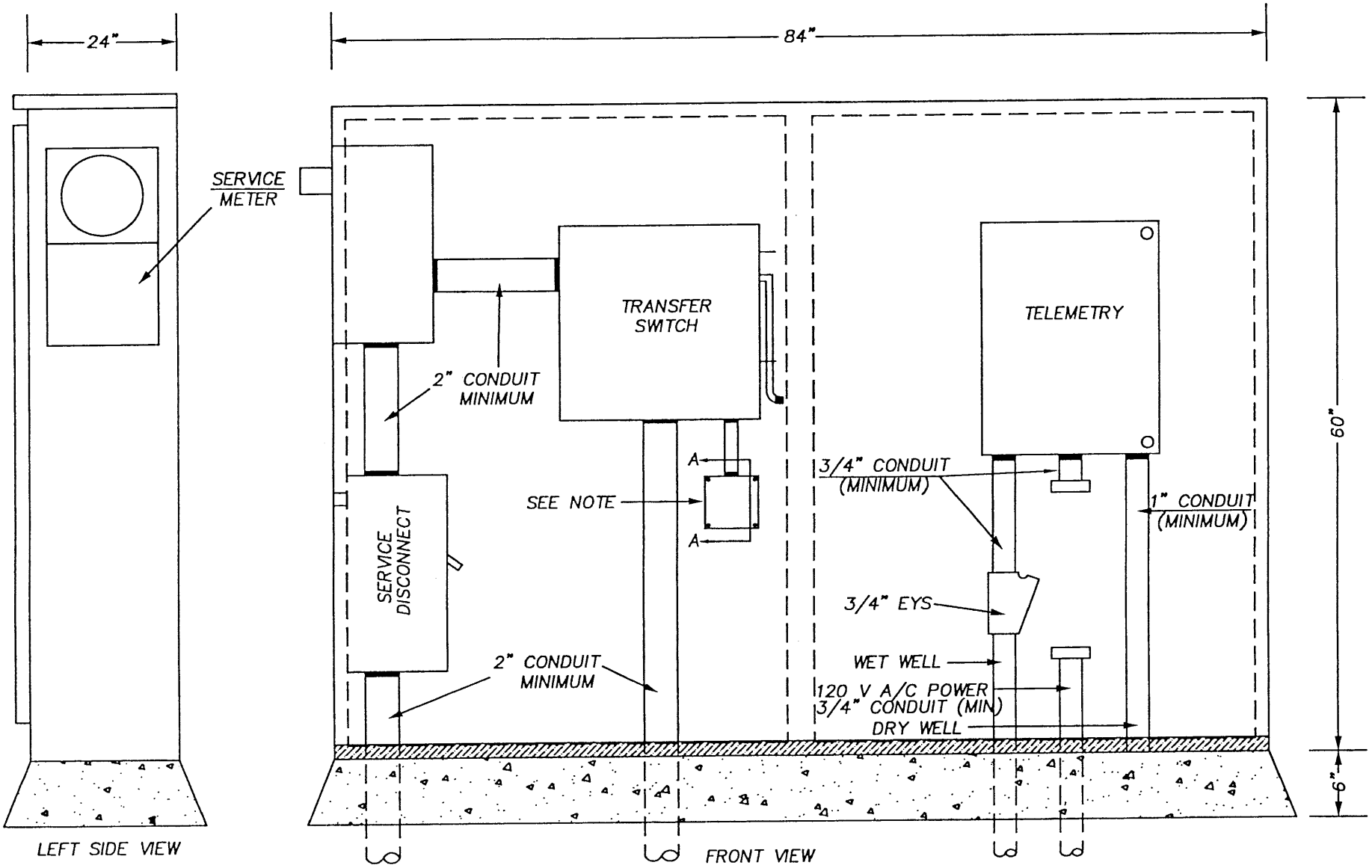

NOTE:

1. SEE STANDARD DRAWING CR020SS FOR SECTION A–A & TOP SLAB PLAN

APPROVED BY	REVISED DATE	CITY OF CASTLE ROCK	STD. PLAN NO.
CITY ENGINEER	8/24/01	STANDARD LIFT STATION CONTROL LAYOUT	CR019SS

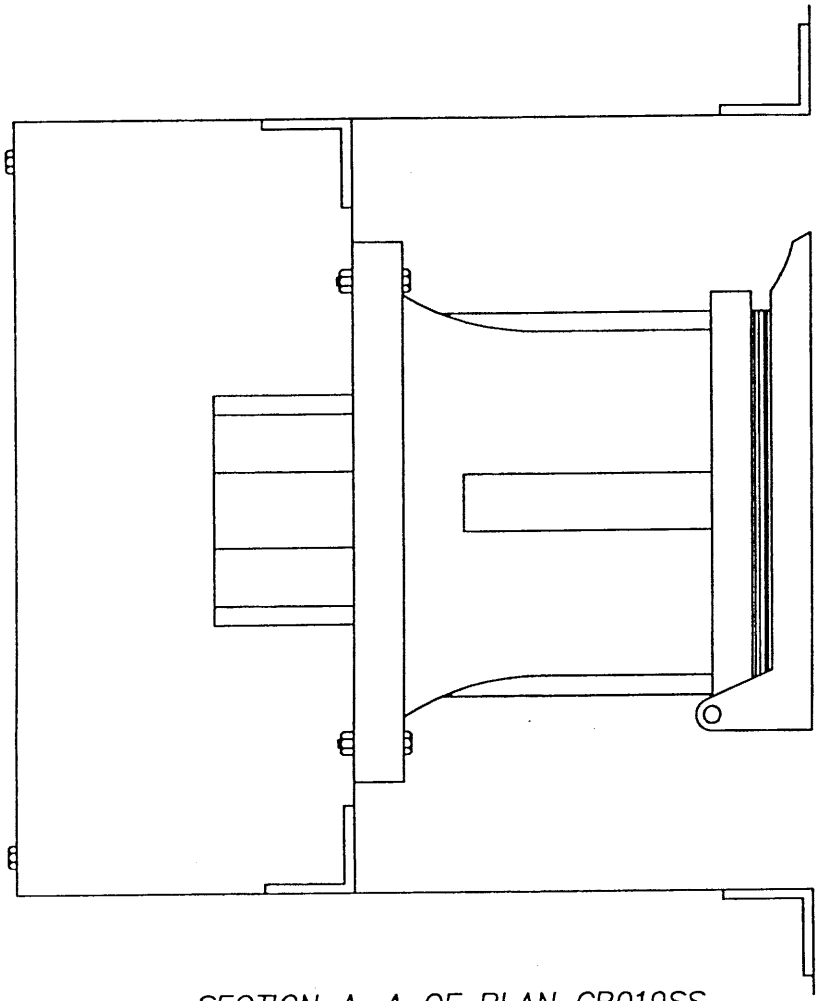

SECTION A–A OF PLAN CR019SS

GENERAL RECEPTACLE

NOTE: OTHER LAYOUTS MAY BE APPROVED TO MEET SPECIFIC NEEDS PROVIDING ALL ELEMENTS ARE PROVIDED

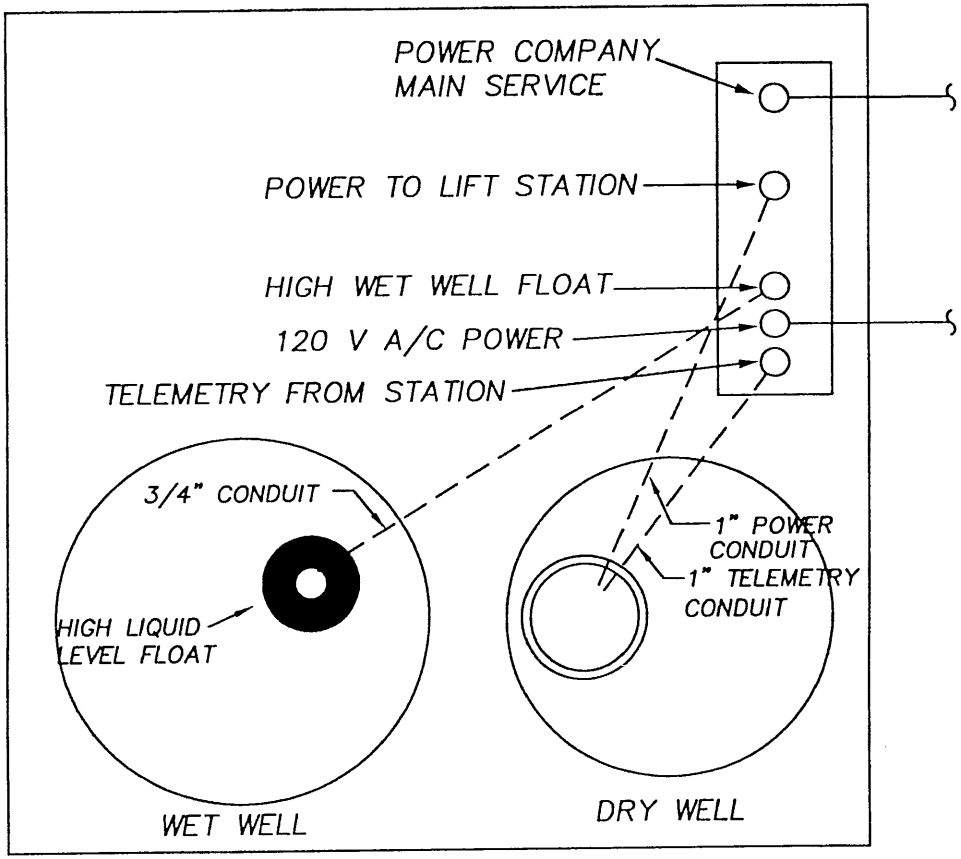

TOP SLAB PLAN

SEE PLAN CR019SS FOR CONDUIT SIZES

APPROVED BY	REVISED DATE	CITY OF CASTLE ROCK	STD. PLAN NO.
CITY ENGINEER	8/24/01	STANDARD LIFT STATION LAYOUT	CR020SS

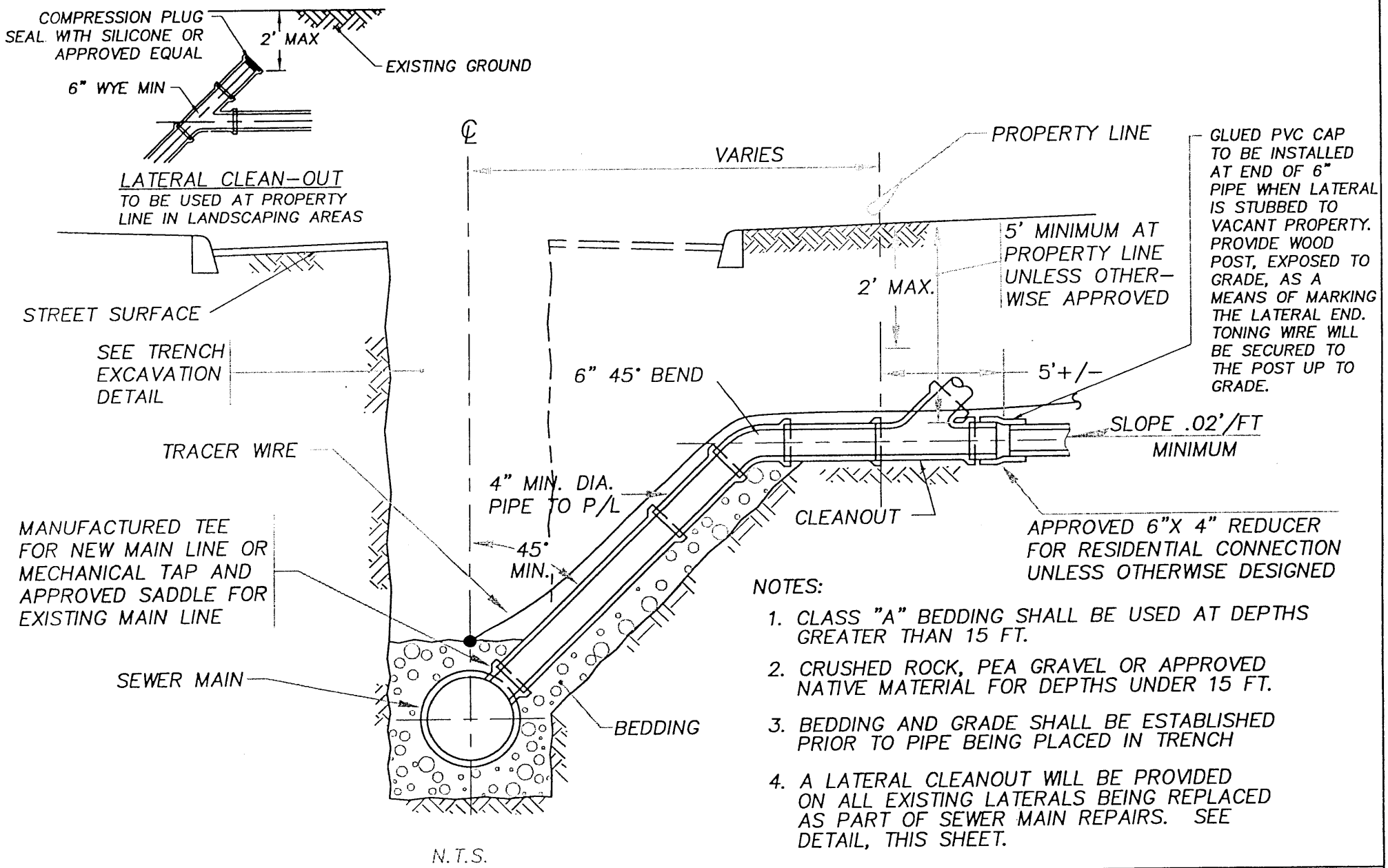

NOTES:

1. CLASS "A" BEDDING SHALL BE USED AT DEPTHS GREATER THAN 15 FT.
2. CRUSHED ROCK, PEA GRAVEL OR APPROVED NATIVE MATERIAL FOR DEPTHS UNDER 15 FT.
3. BEDDING AND GRADE SHALL BE ESTABLISHED PRIOR TO PIPE BEING PLACED IN TRENCH
4. A LATERAL CLEANOUT WILL BE PROVIDED ON ALL EXISTING LATERALS BEING REPLACED AS PART OF SEWER MAIN REPAIRS. SEE DETAIL, THIS SHEET.

N.T.S.

APPROVED BY	REVISED DATE	CITY OF CASTLE ROCK	STD. PLAN NO.
CITY ENGINEER	8/24/01	SANITARY SEWER LATERAL SERVICE CONNECTION	CR021SS

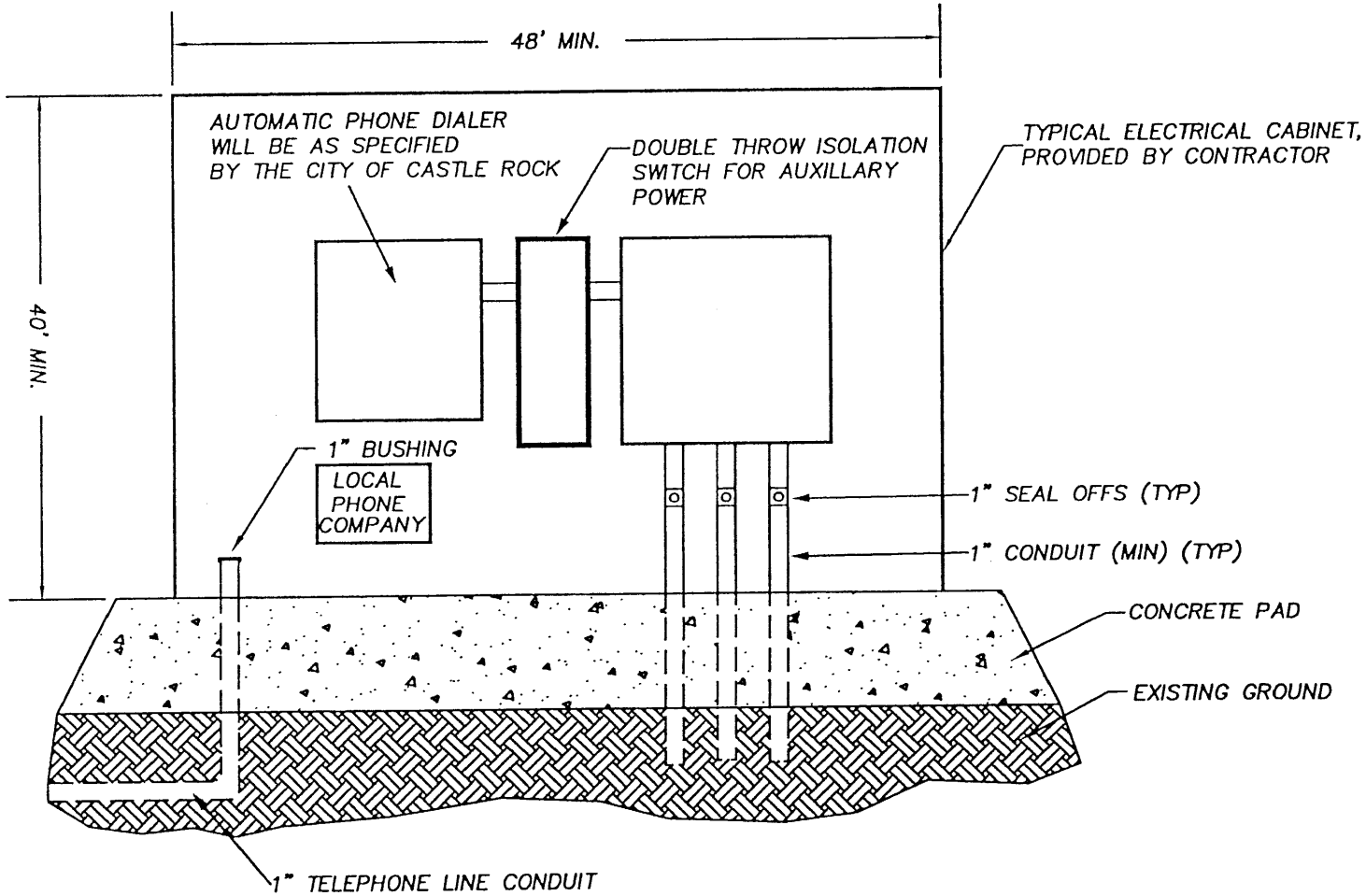

APPROVED BY	REVISED DATE	CITY OF CASTLE ROCK	STD. PLAN NO.
CITY ENGINEER	8/24/01	COMMERCIAL / MULTI-FAMILY PRESSURE SEWER SYSTEM ELECTRICAL CABINET LAYOUT	CR022SS

THRUST AT FITTINGS IN POUNDS DUE TO WATER PRESSURE

	PRESSURE PSI	TEES DEAD ENDS	90 DEG. BEND	45 DEG BEND	22 1/2 DEG BEND
3"	100	1220	1720	931	474
	150	1330	1880	1020	519
	200	1610	2270	1230	628
4"	100	1940	2750	1490	759
	150	2020	2860	1550	790
	200	2350	3330	1800	919
6"	100	3830	5420	2930	1500
	150	4100	5800	3140	1600
	200	4750	6710	3630	1850
8"	100	6580	9310	5040	2570
	150	6980	9870	5340	2720
	200	7910	11200	6050	3090
10"	50	9820	13900	7510	3830
	100	10300	14600	7890	4020
	150	11300	15900	8620	4400
	200	12300	17400	9450	4810
12	50	13800	19500	10600	5390
	100	14600	20600	11200	5700
	150	15900	22500	12200	6210
	200	17200	24400	13200	6720

SAFE BEARING LOADS

SOIL	SAFE BEARING LOAD (PSF)
MUCK, PEAT, ETC.*	0
SOFT CLAY	1,000
SAND	2,000
SAND AND GRAVEL	3,000
SAND AND GRAVEL CEMENTED WITH CLAY	4,000
HARD SHALE	10,000

*IN MUCK OR PEAT, ALL THRUSTS ARE RESISTED BY PILES OR TIE RODS TO SOLID FOUNDATIONS OR BY REMOVAL OF MUCK OR PEAT AND REPLACEMENT WITH BALLAST OF SUFFICIENT STABILITY TO RESIST THRUSTS.

APPROVED BY	REVISED DATE	CITY OF CASTLE ROCK	STD. PLAN NO.
CITY ENGINEER	8/24/01	THRUST BLOCKING DETAILS FOR FORCE MAINS	CR026SS

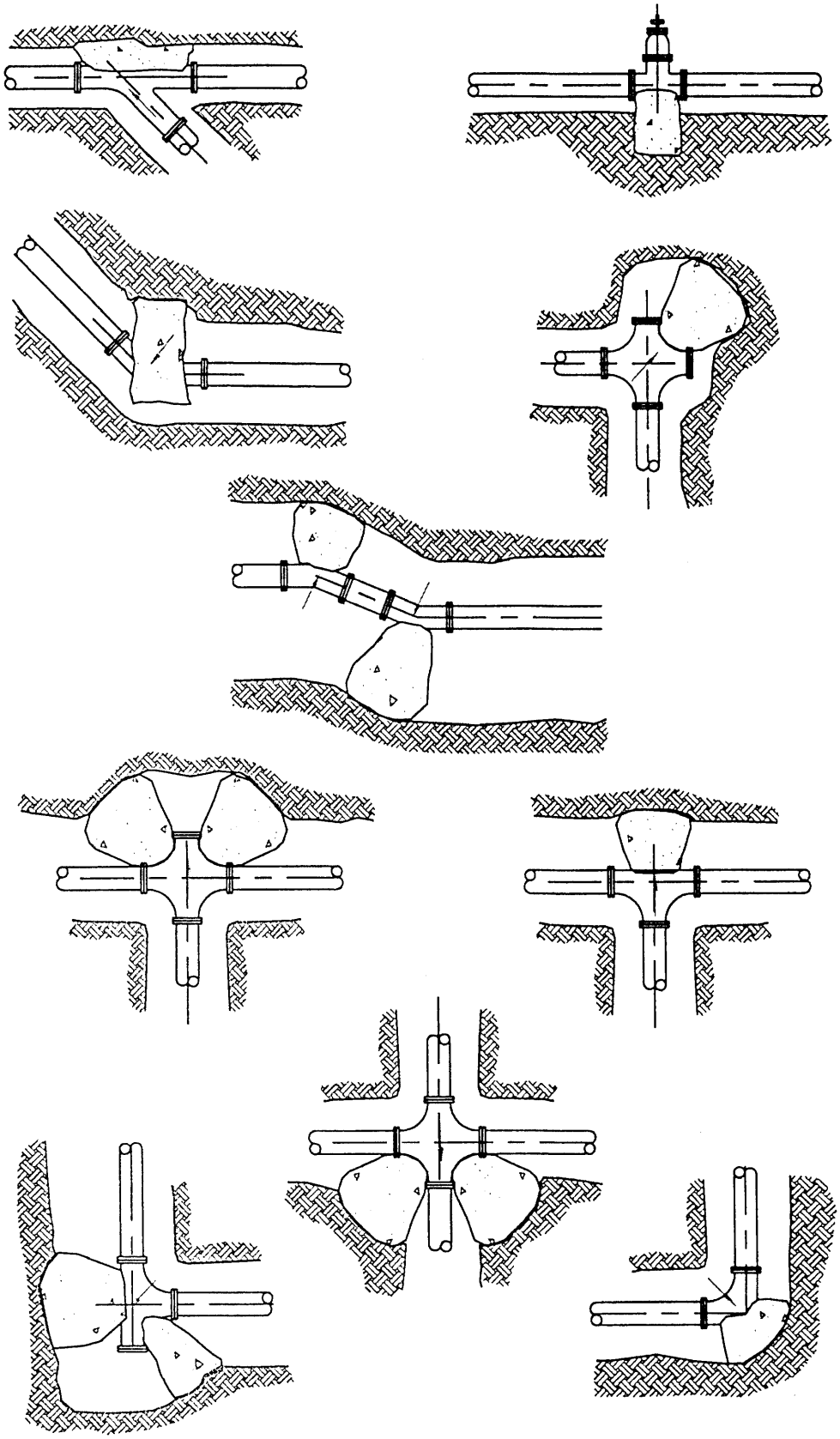

APPROVED BY	REVISED DATE	CITY OF CASTLE ROCK	STD. PLAN NO.
CITY ENGINEER	8/24/01	THRUST BLOCKING DETAILS (SECTIONS) FOR FORCE MAINS	CR027SS

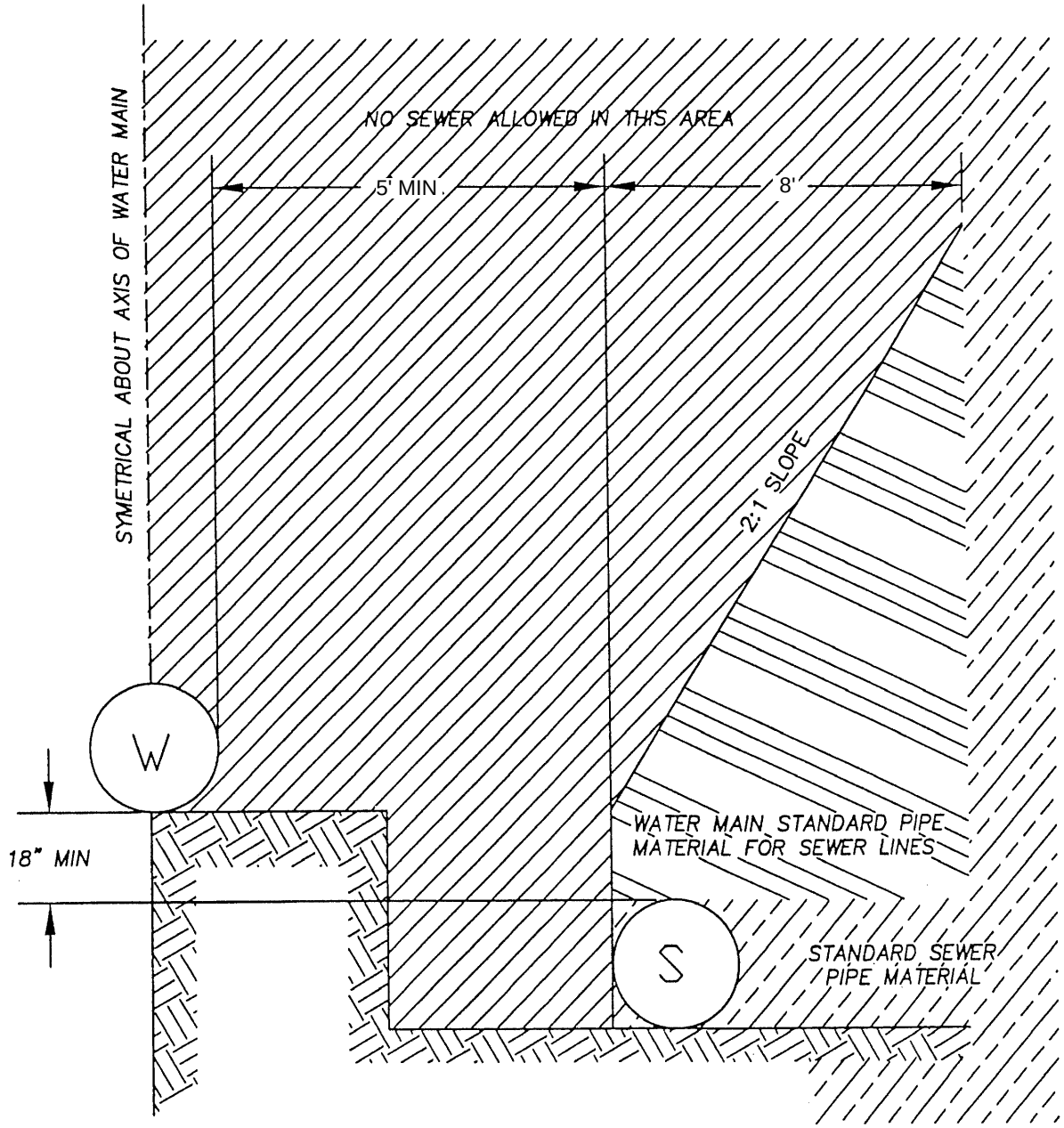

APPROVED BY	REVISED DATE	CITY OF CASTLE ROCK	STD. PLAN NO.
CITY ENGINEER	08/24/01	SANITARY SEWER/WATER MAIN PARALLEL CONSTRUCTION DETAIL	CR028SS

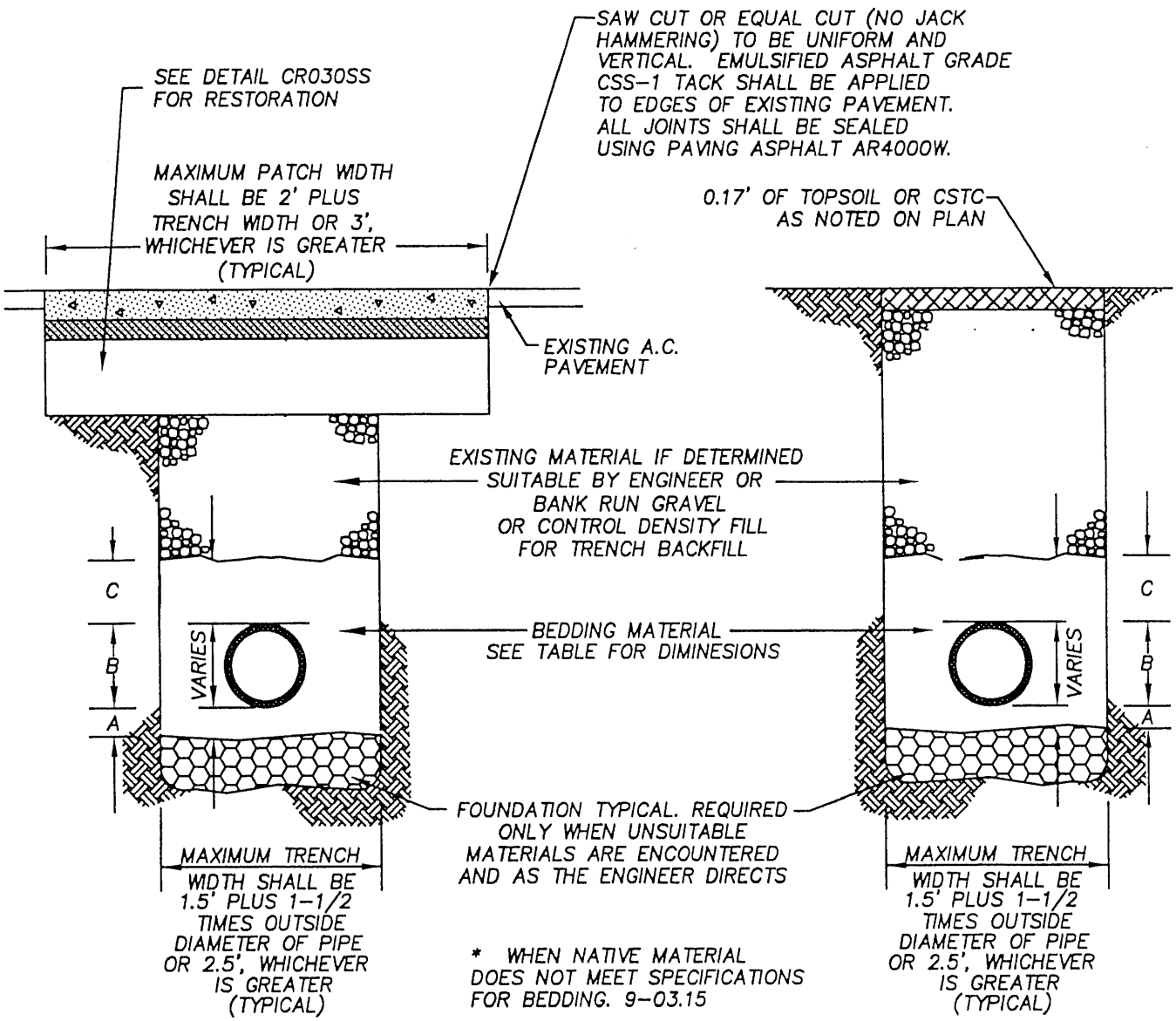

	PIPE BEDDING DIMENSIONS	
DIMENSION	FOR FLEXIBLE PIPE	FOR RIGID PIPE
A	0.34'	0-0.34'*
B	O.D.	N/A
C	0.5'	N/A

NOTES:

1. ALL MATERIALS EXCEPT A.C.P. AND BEDDING MATERIAL SHALL BE COMPACTED IN 6-INCH MAXIMUM LIFTS TO 95% DENSITY.
2. BEDDING SHALL CONFORM TO SECTION 9-03.15 OF WSDOT/APWA STANDARD SPECIFICATIONS.
3. COMPACTION: BEDDING SHALL BE COMPACTED TO 95% MAX. AS DETERMINED BY ASTM D1557. BACKFILL SHALL BE COMPACTED TO 85% IN UNPAVED AREA, AND 95% IN PAVED OR SHOULDER AREAS AS DETERMINED BY ASTM D1557.
4. ALL MATERIALS, WORKMANSHIP, AND INSTALLATION SHALL BE IN CONFORMANCE WITH THE MOST CURRENT WSDOT/APWA STANDARD SPECIFICATIONS AS AMENDED BY THE CITY OF OLYMPIA PUBLIC WORKS STANDARDS.
5. FOR LONGITUDINAL TRENCH CUTS WITHIN TRAVEL LANE, CITY REQUIRES MINIMUM OF ONE LANE OVERLAY IN ADDITION TO TRENCH PATCH DETAIL FOR CONCRETE AND ASPHALT ROADWAYS. ADDITIONAL OVERLAY MAY BE REQUIRED DEPENDING ON LOCATION AND TRENCHING WIDTH. SEE SECTION 7A.180 TRENCH BACKFILL AND RESTORATION FOR DETAIL REQUIREMENTS.

APPROVED BY	REVISED DATE	CITY OF CASTLE ROCK	STD. PLAN NO.
CITY ENGINEER	8/24/01	TRENCH-PAVEMENT RESTORATION DETAIL	CR029SS

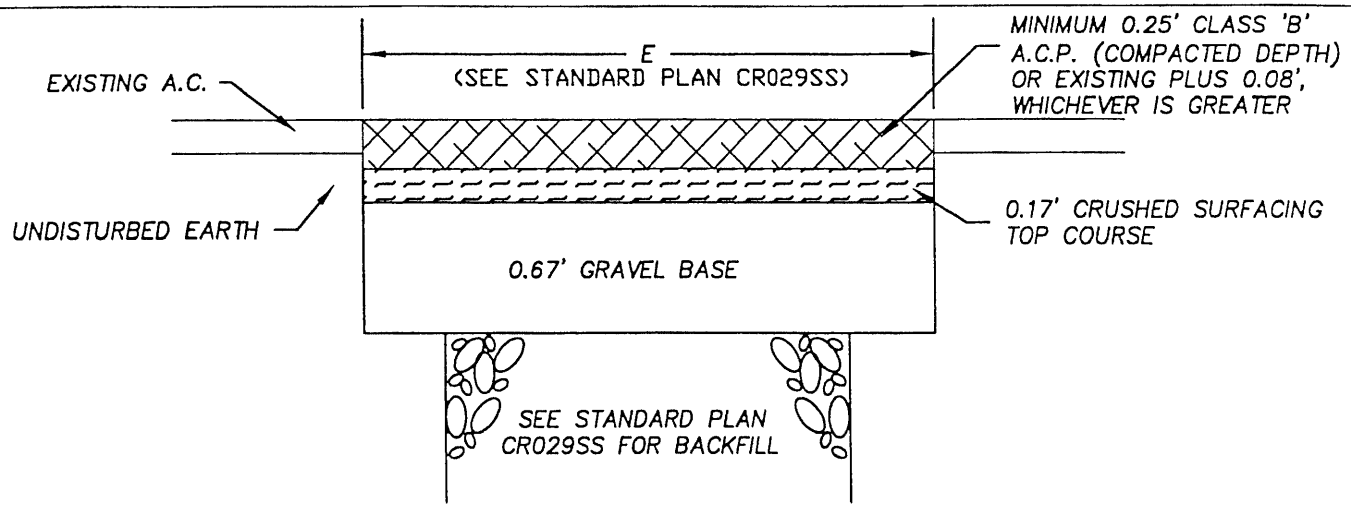

CASE 1: (WITHOUT BASE)

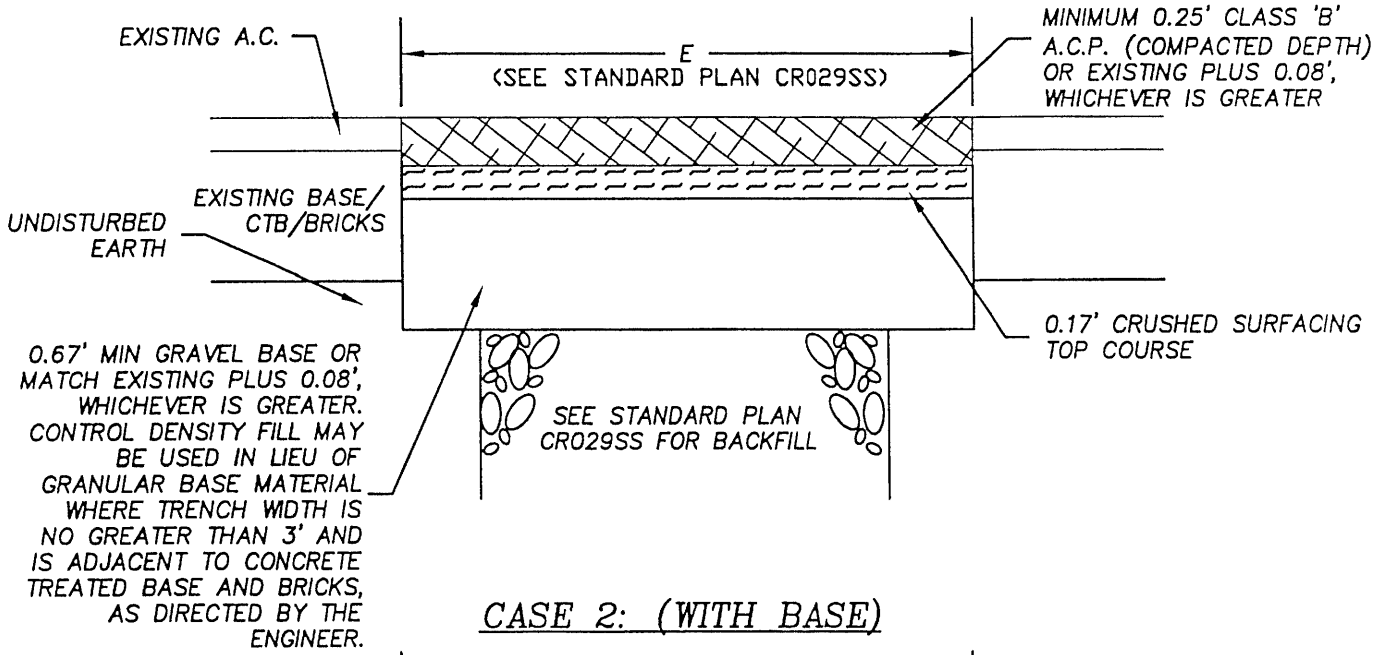

CASE 2: (WITH BASE)

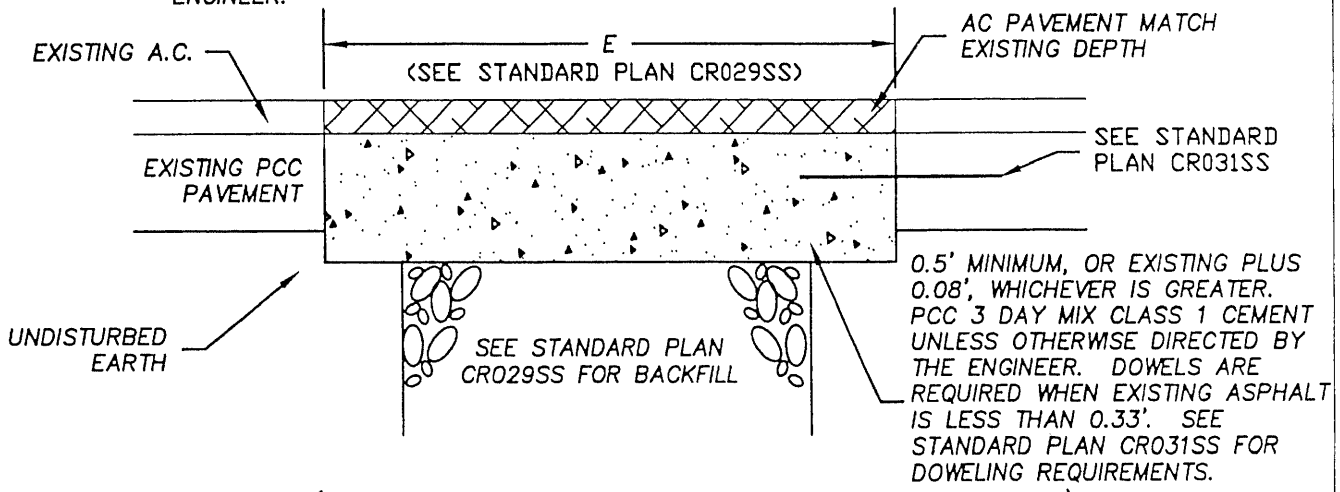

CASE 3: (WITH AC PAVEMENT ON PCC PAVEMENT)

NOTE CASE 1,2,3:
WHEN CUT LINE IS LESS THAN THREE FEET FROM A CUT LINE, CURB OR PAVEMENT EDGE, THE EXISTING PAVEMENT SHALL BE REMOVED TO THE CUT LINES.

APPROVED BY	REVISED DATE	CITY OF CASTLE ROCK	STD. PLAN NO.
CITY ENGINEER	8/24/01	PAVEMENT REPLACEMENT	CR030SS

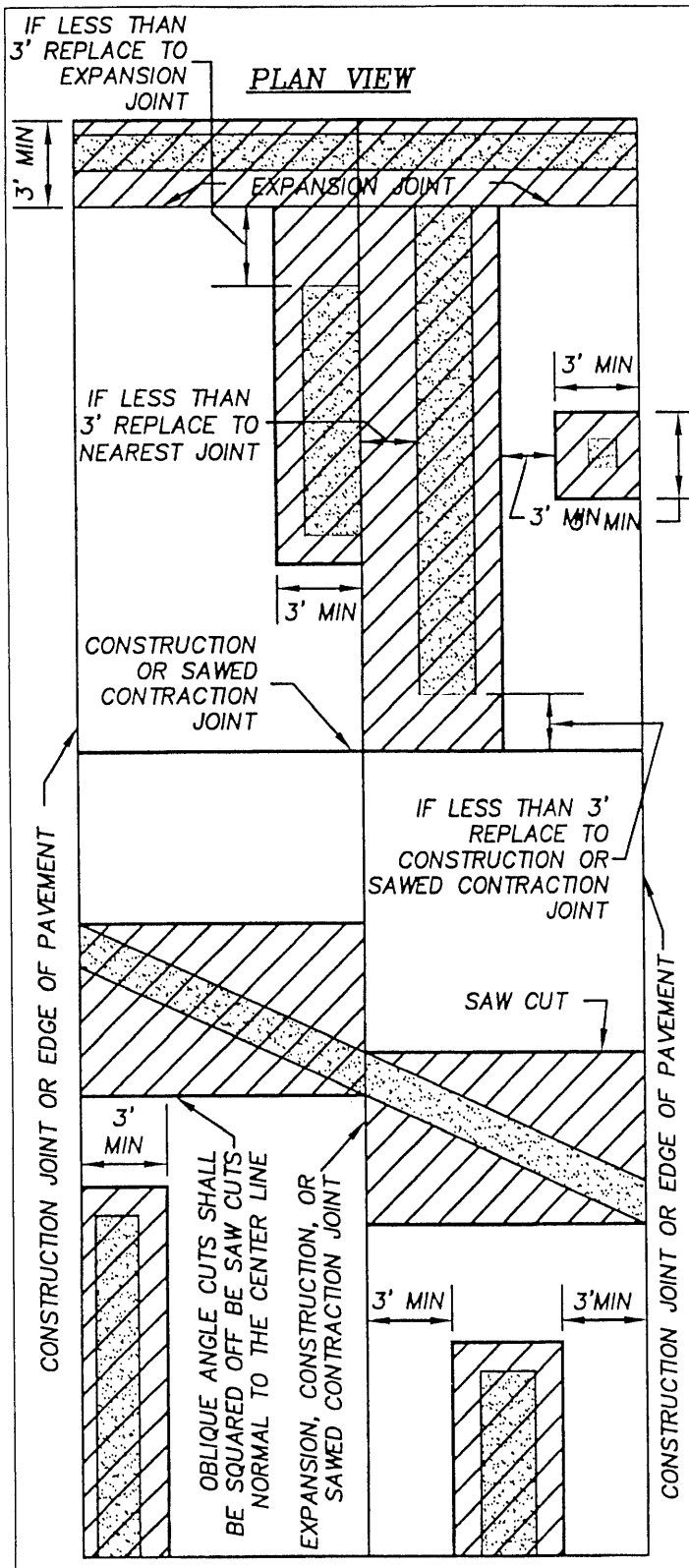

NOTES

1. THE EXTENT OF REPAIR OF CONCRETE CUTS NOT SHOWN ON THIS STANDARD OR FOR CUTS MADE WITHIN THREE FEET OF EXISTING PATCHES, CRACKS OR DETERIORATED SLABS SHALL BE DETERMINED BY THE ENGINEER.

2. ALL TRANSVERSE AND LONGITUDINAL JOINTS AND OUTER EDGES OF THE PAVEMENT WHICH ARE PART OF THE REPLACED CONCRETE SHALL BE EDGED WITH AN EDGING TOOL HAVING A RADIUS OF 0.25 INCH.

3. REPLACED CONCRETE THAT JOINS A SAWED EDGE OF THE EXISTING PAVEMENT SHALL NOT BE EDGED.

4. REPLACED CONCRETE SHALL BE FINISHED TO THE SAME SURFACE TEXTURE AS THAT OF ADJACENT EXISTING CONCRETE.

5. ALL PAVEMENT REMOVALS SHALL BE MADE ON STRAIGHT LINE SAW CUTS A MINIMUM OF 1.5 INCHES DEEP. IF CUT LINE IS LESS THAN THREE FEET FROM A CUT LINE, EXPANSION JOINT OR EDGE, THE EXISTING PAVEMENT SHALL BE REMOVED TO THOSE CUT LINES, EXPANSION JOINT OR EDGE OR AS DIRECTED BY THE ENGINEER.

6. DURING EXCAVATION AND SUBGRADE PREPARATION, THE CONTRACTOR SHALL TAKE ALL NECESSARY STEPS TO INSURE THE PROTECTION OF ALL UTILITIES AND ADJACENT PAVEMENT SECTIONS.

7. DOWELS ARE NOT REQUIRED ON THE SIDE BORDERING CURBS, LONGITUDINAL EXPANSION JOINTS, OR TRANSVERSE CONSTRUCTION JOINTS.

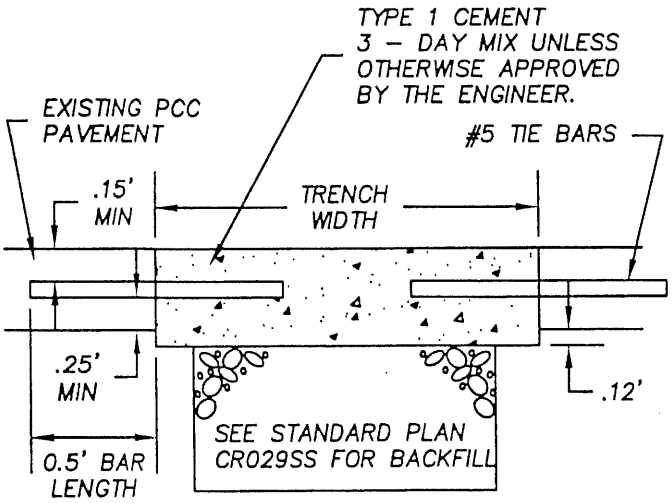

REPLACEMENT SECTION

CEMENT CONCRETE REPLACEMENT WIDTH	DOWEL BAR LENGTH	SPACING
4' OR LESS	16 INCHES	18 INCH CENTERS
4' TO 6'	24 INCHES	18 INCH CENTERS
6' OR GREATER	30 INCHES	18 INCH CENTERS

LEGEND

EXCAVATION

AREA OF CONCRETE PAVEMENT TO BE REPLACED

SAW CUT 1 1/2" DEPTH

APPROVED BY	REVISED DATE	CITY OF CASTLE ROCK	STD. PLAN NO.
CITY ENGINEER	08/24/01	CONCRETE PAVEMENT REPLACEMENT	CR031SS

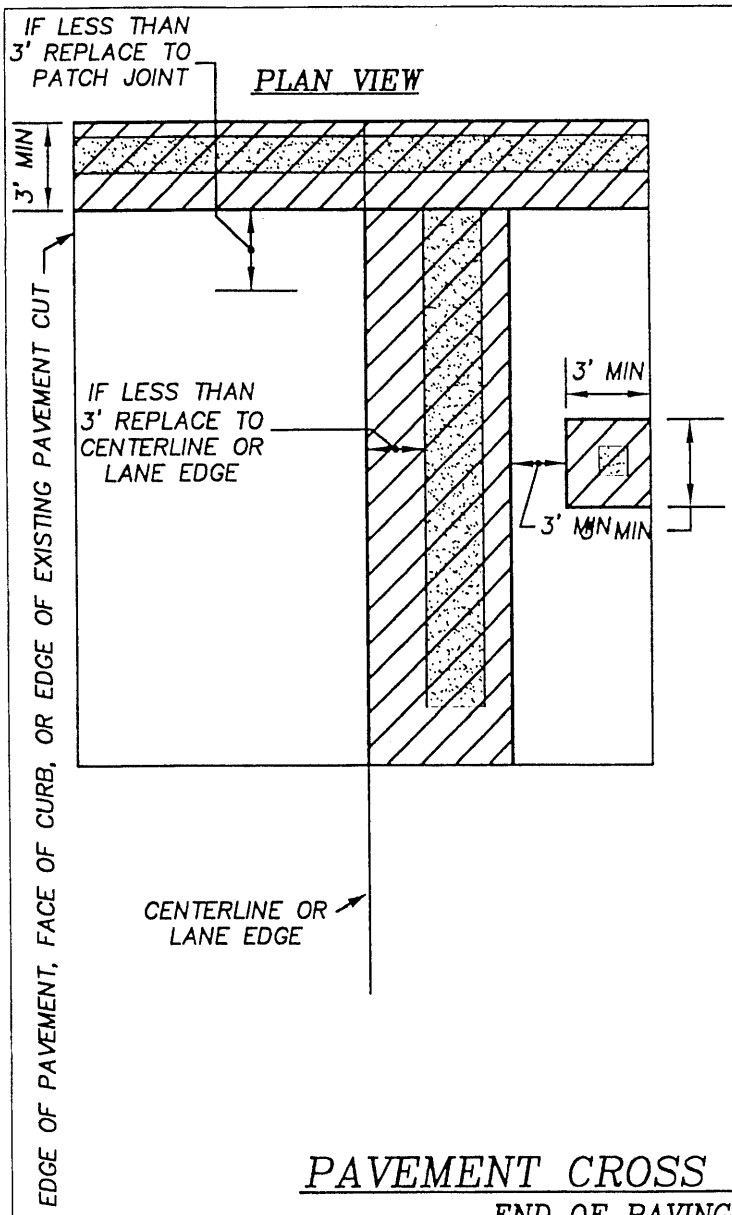

NOTES

1. THE EXTENT OF REPAIR OF ASPHALT CUTS NOT SHOWN ON THIS STANDARD OR FOR CUTS MADE WITHIN THREE FEET OF EXISTING PATCHES, CRACKS OR DETERIORATED PAVEMENTS SHALL BE DETERMINED BY THE ENGINEER AND PERFORMED PER THE SUBMITTED RESTORATION/PAVEMENT DESIGN.

2. ALL PAVEMENT REMOVALS SHALL BE MADE ON STRAIGHT LINE SAW CUTS. IF CUT LINE IS LESS THAN THREE FEET FROM A CUT LINE, EXPANSION JOINT OR EDGE, THE EXISTING PAVEMENT SHALL BE REMOVED TO THOSE CUT LINES, EXPANSION JOINT OR EDGE OR AS DIRECTED BY THE ENGINEER.

3. DURING EXCAVATION AND SUBGRADE PREPARATION, THE CONTRACTOR SHALL TAKE ALL NECESSARY STEPS TO INSURE THE PROTECTION OF ALL UTILITIES AND ADJACENT PAVEMENT SECTIONS.

LEGEND

EXCAVATION

AREA OF PAVEMENT TO BE REPLACED

SAW CUT

PAVEMENT CROSS SECTION

END OF PAVING
GRINDING DETAIL

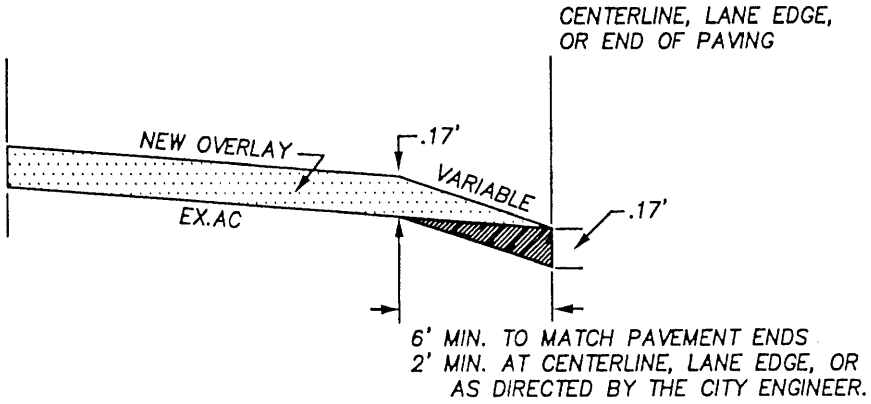

APPROVED BY	REVISED DATE	CITY OF CASTLE ROCK	STD. PLAN NO.
CITY ENGINEER	08/24/01	ASPHALT PAVEMENT RESTORATION	CR032SS

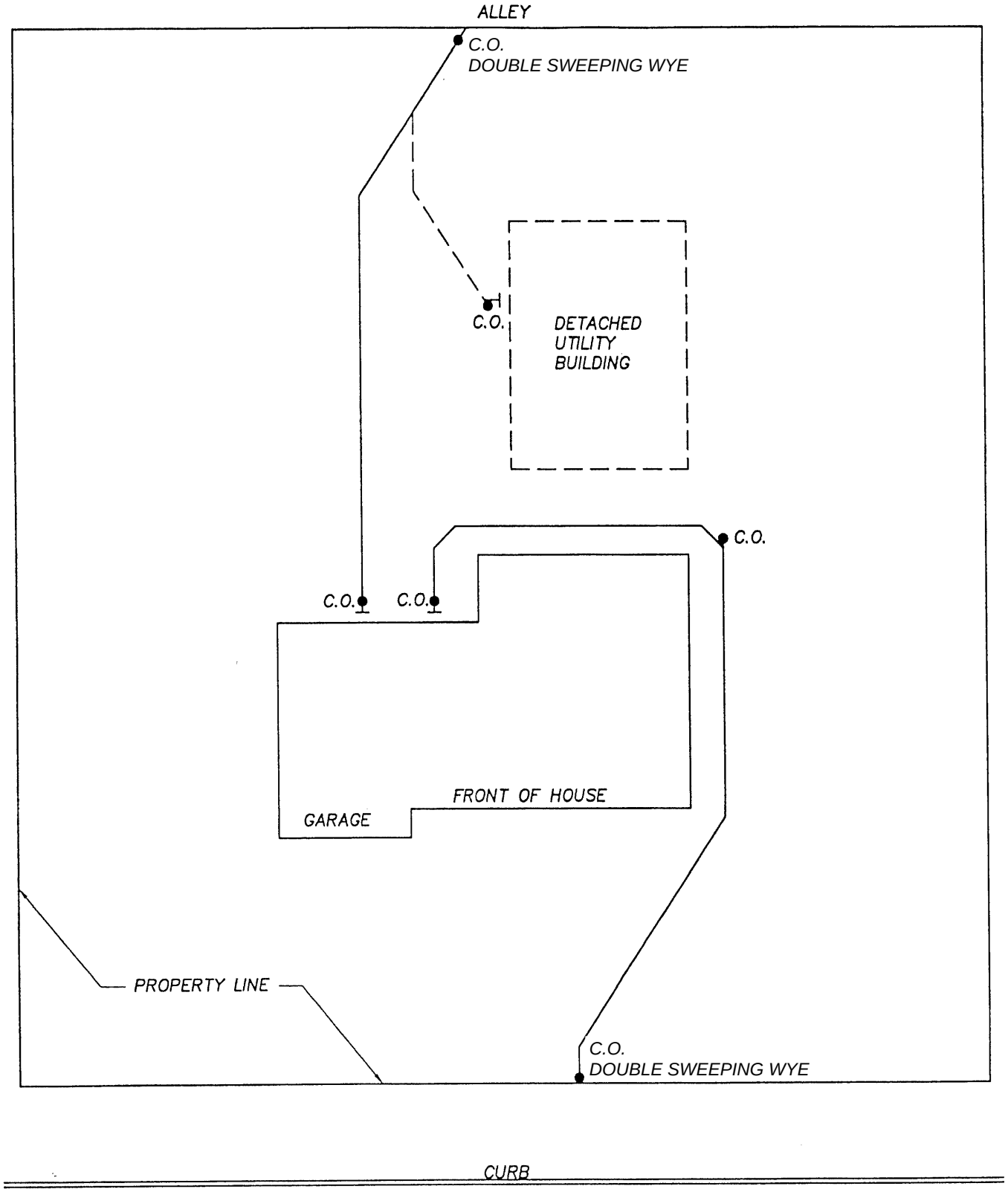

APPROVED BY	REVISED DATE	CITY OF CASTLE ROCK	STD. PLAN NO.
CITY ENGINEER	10/18/01	SEWER DIAGRAM EXAMPLE	CR033SS